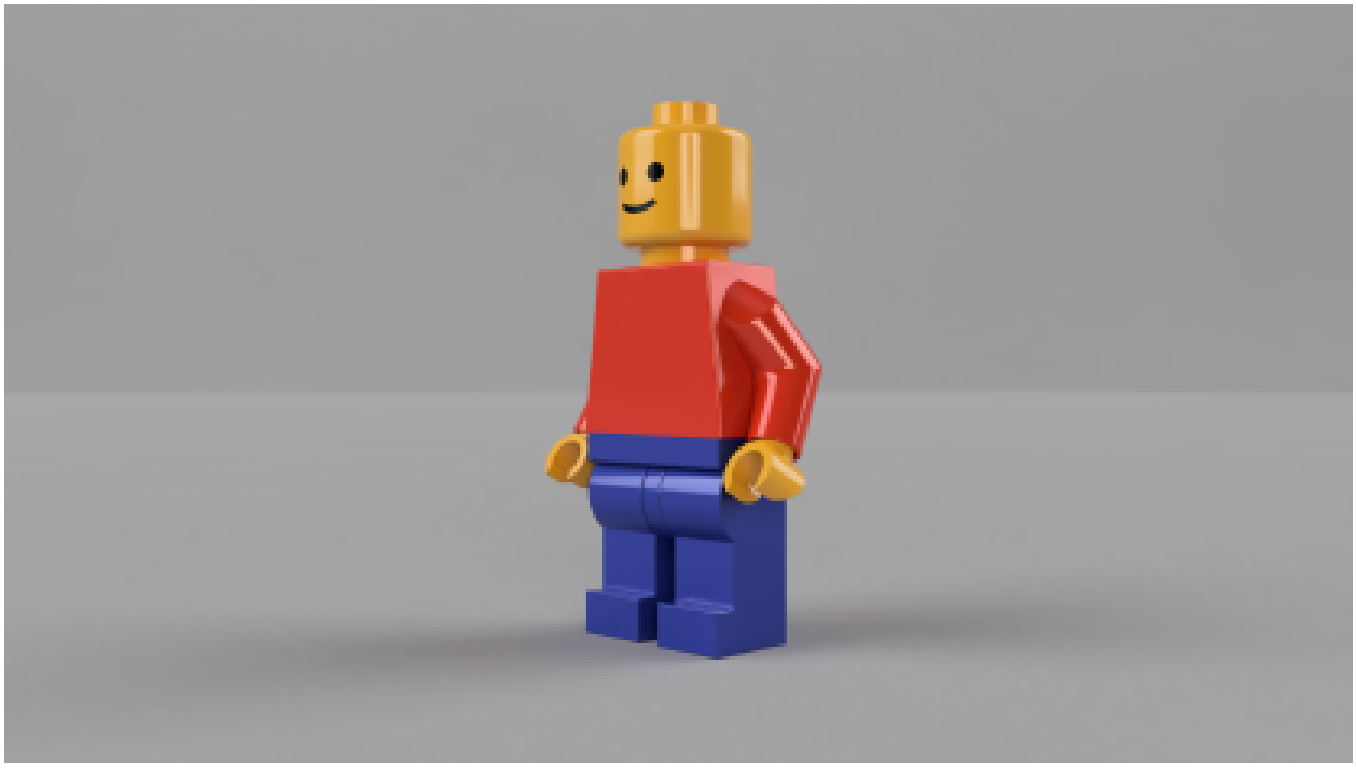

Fusion 360
Solid Modeling ④
LEGOMAN_WAIST
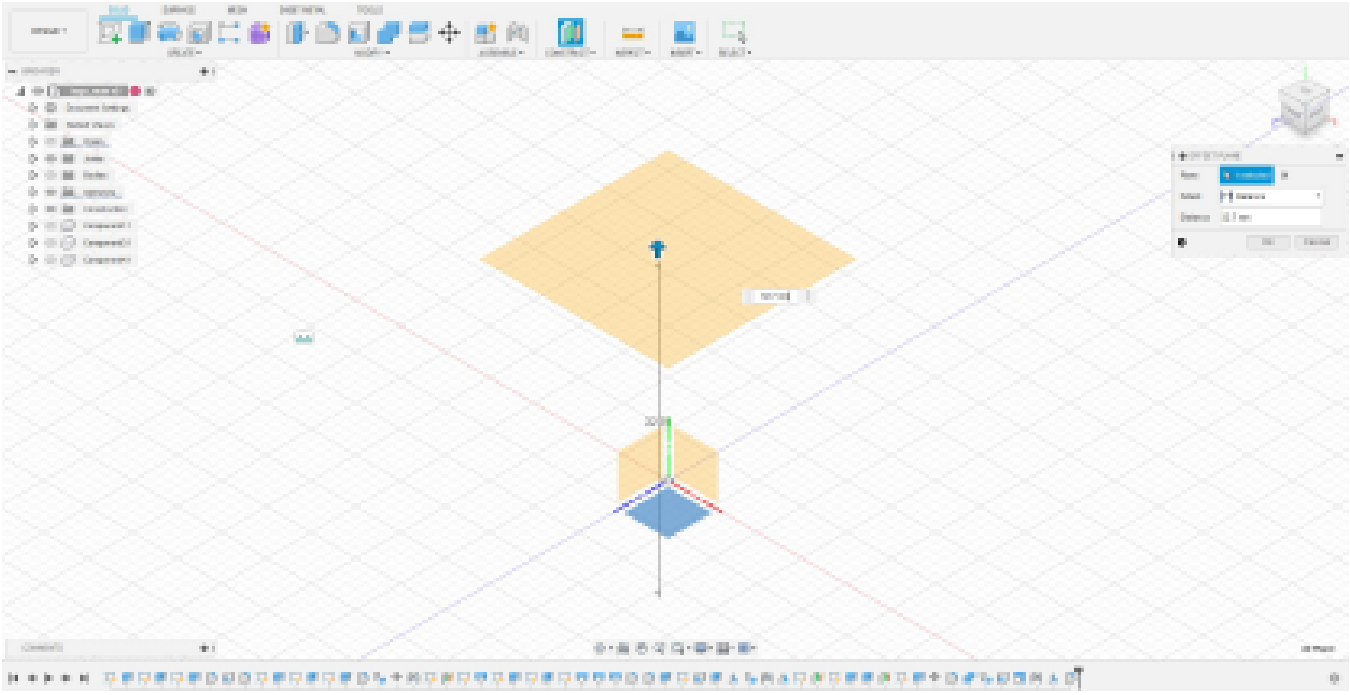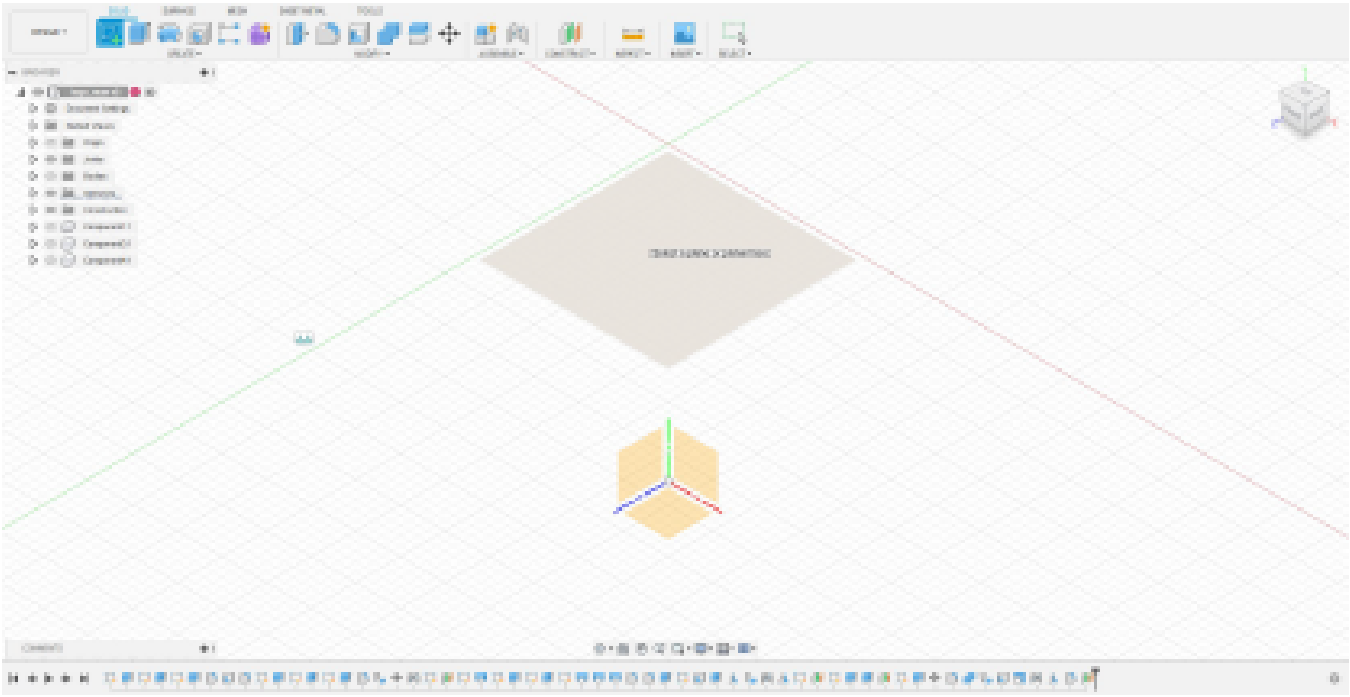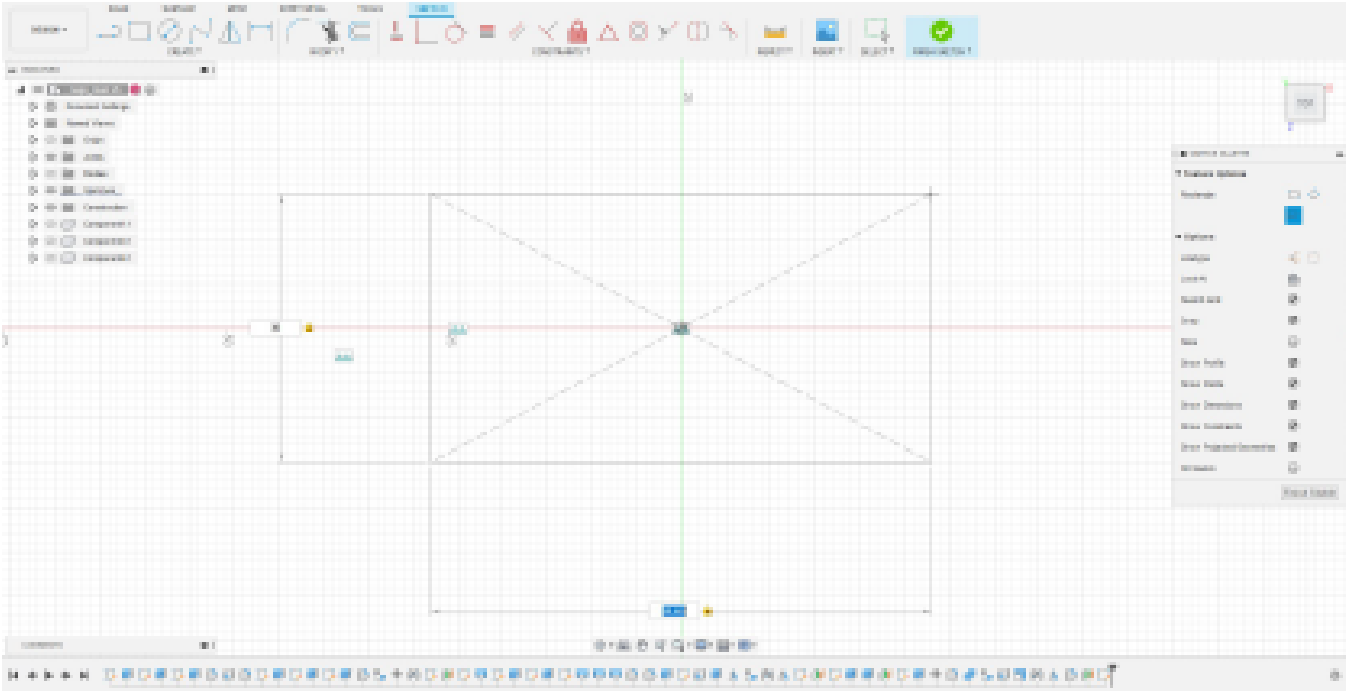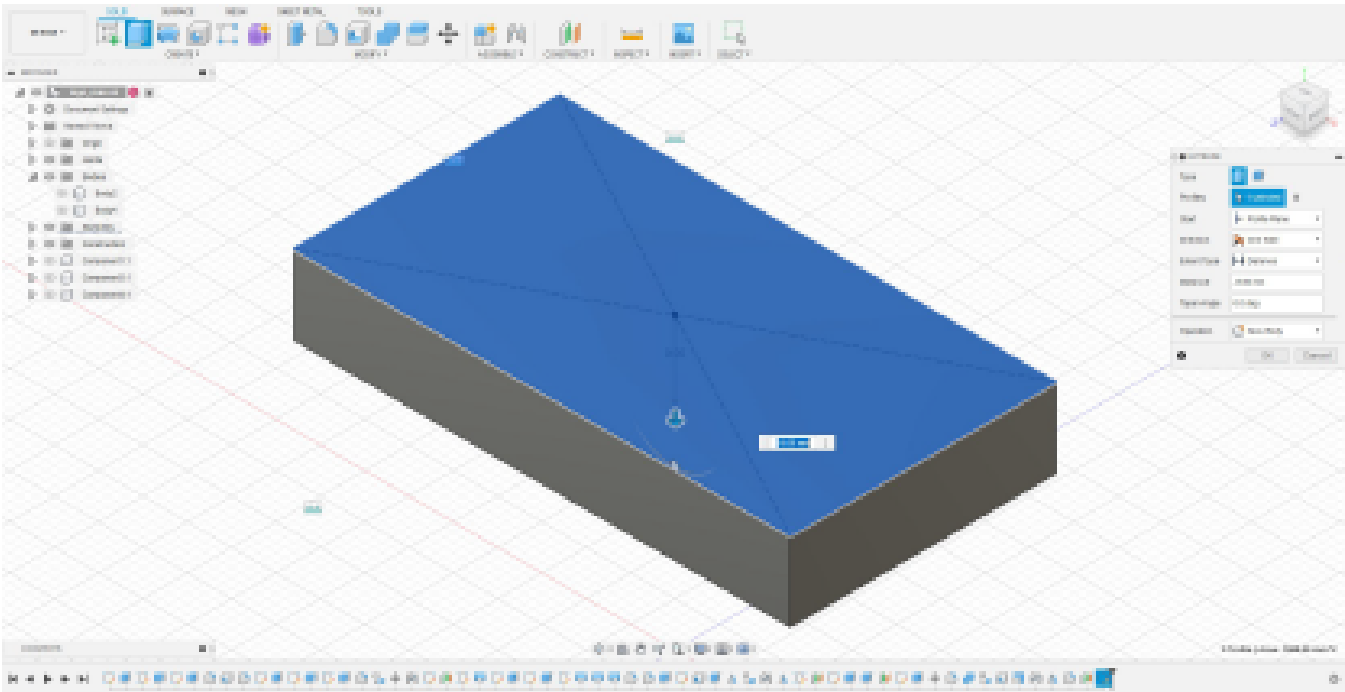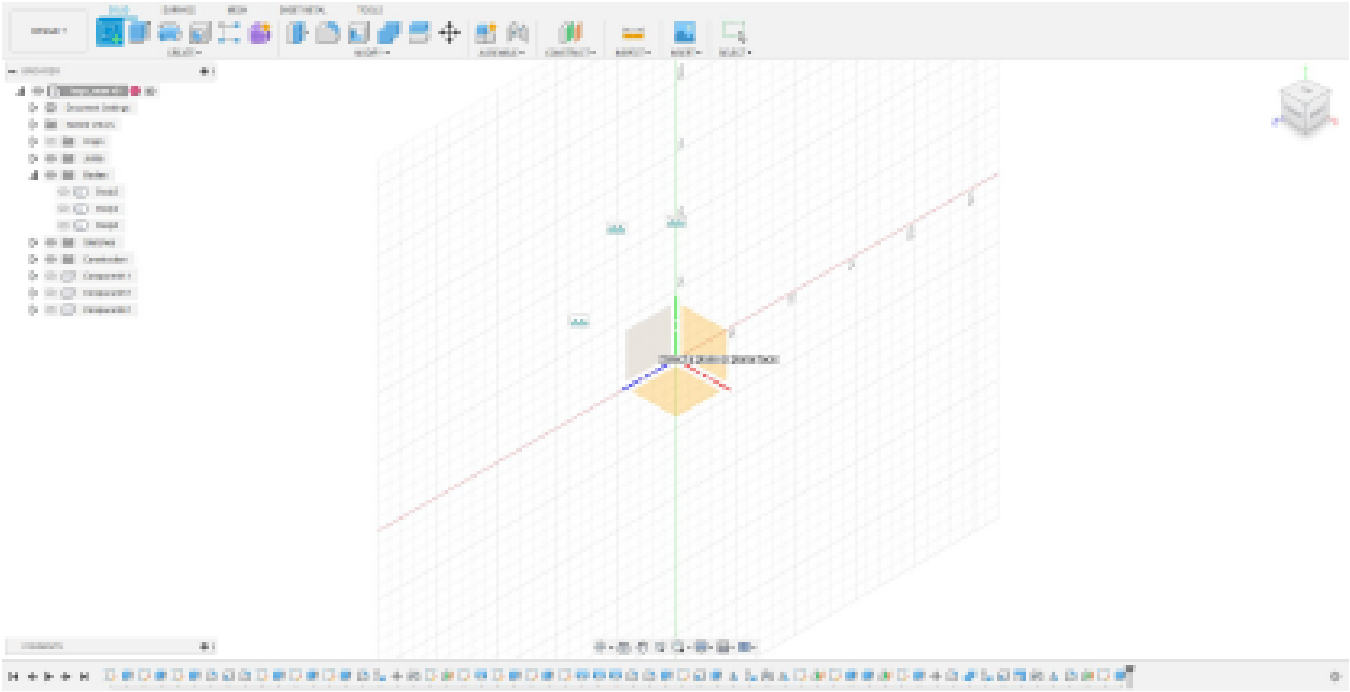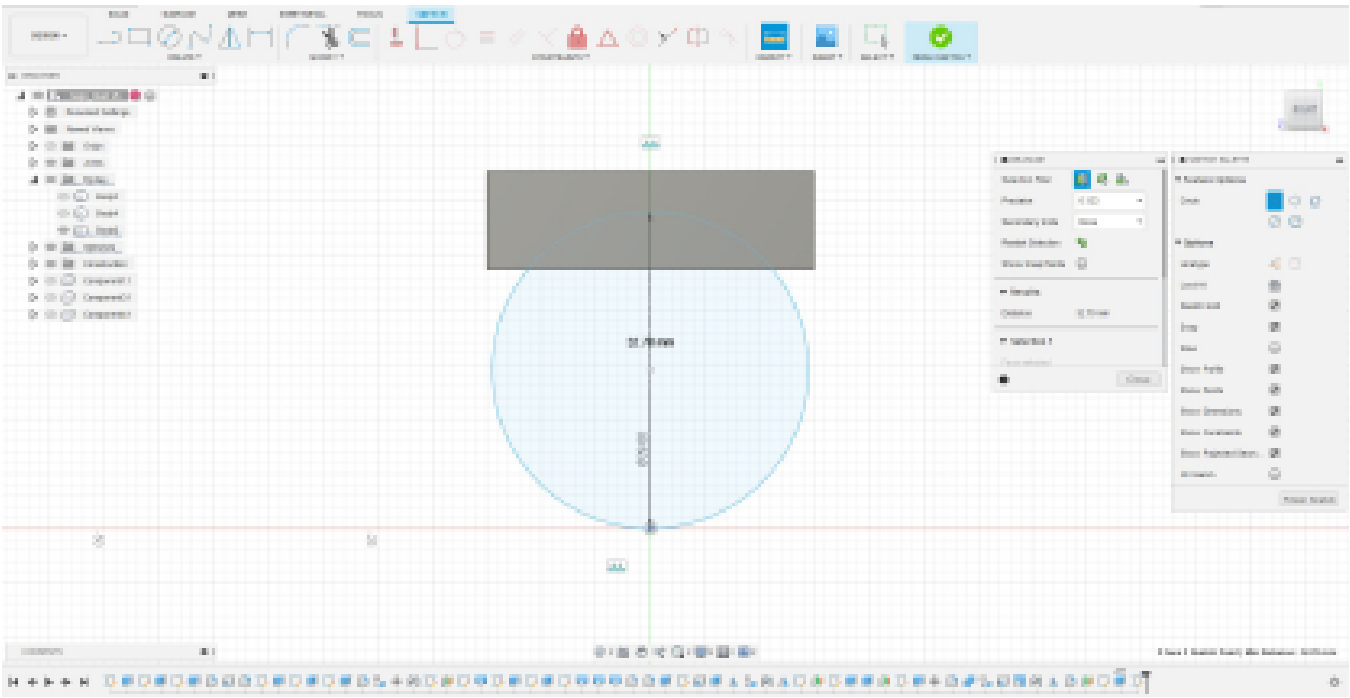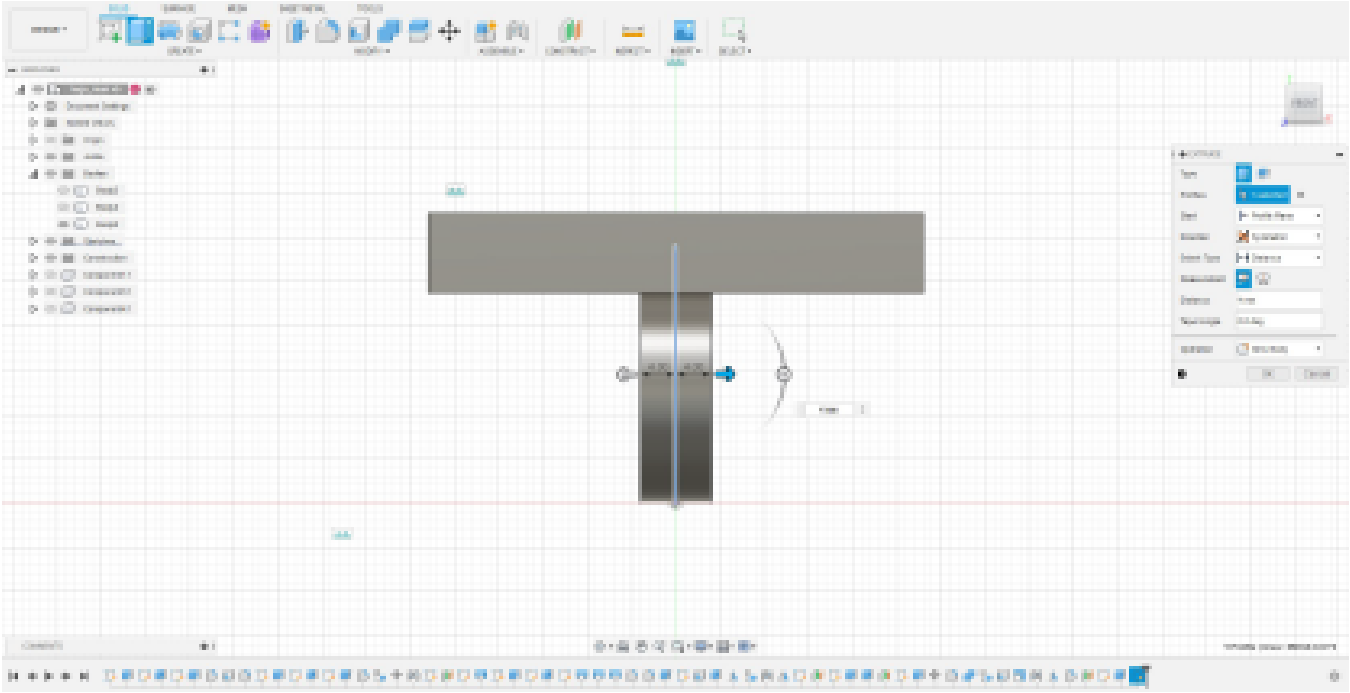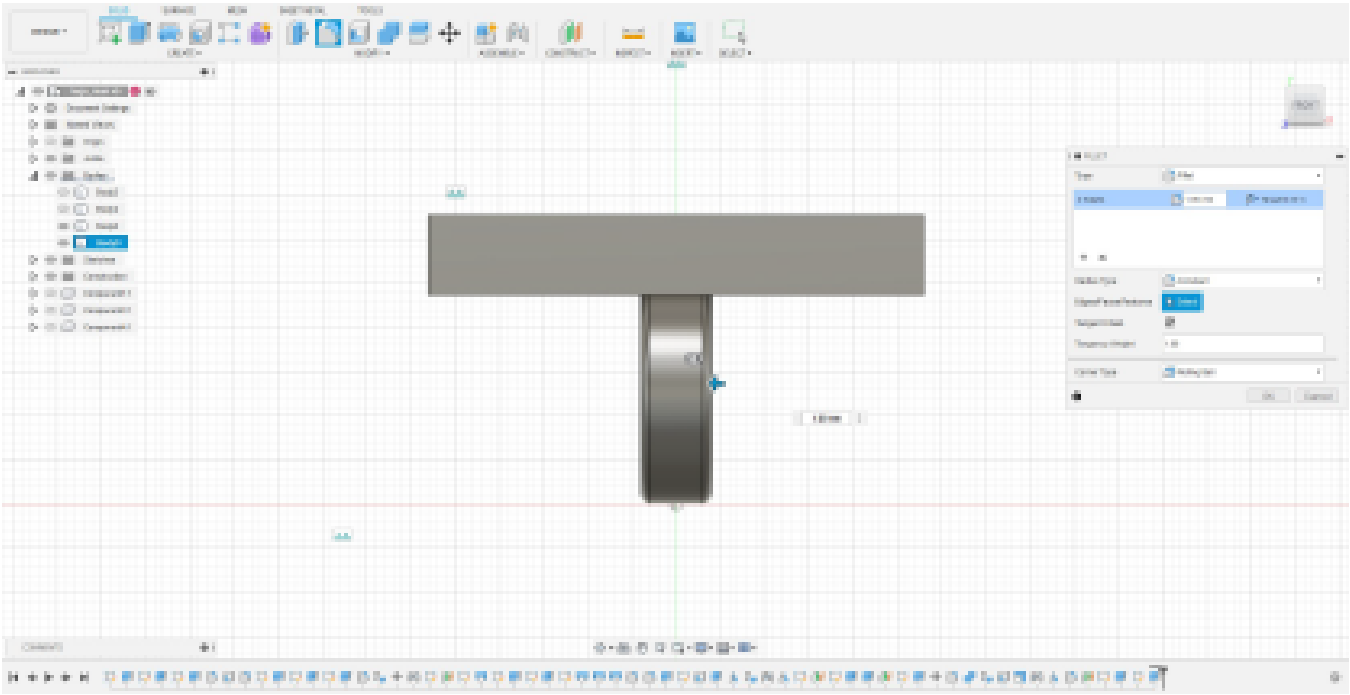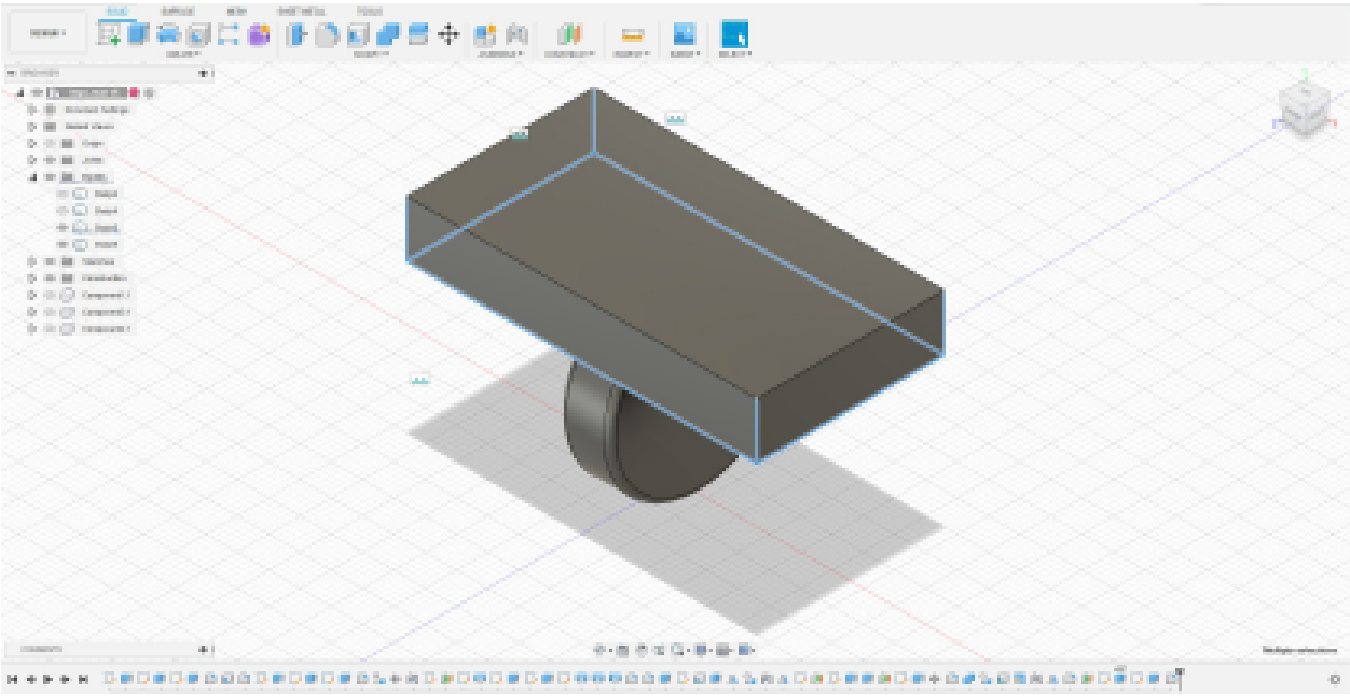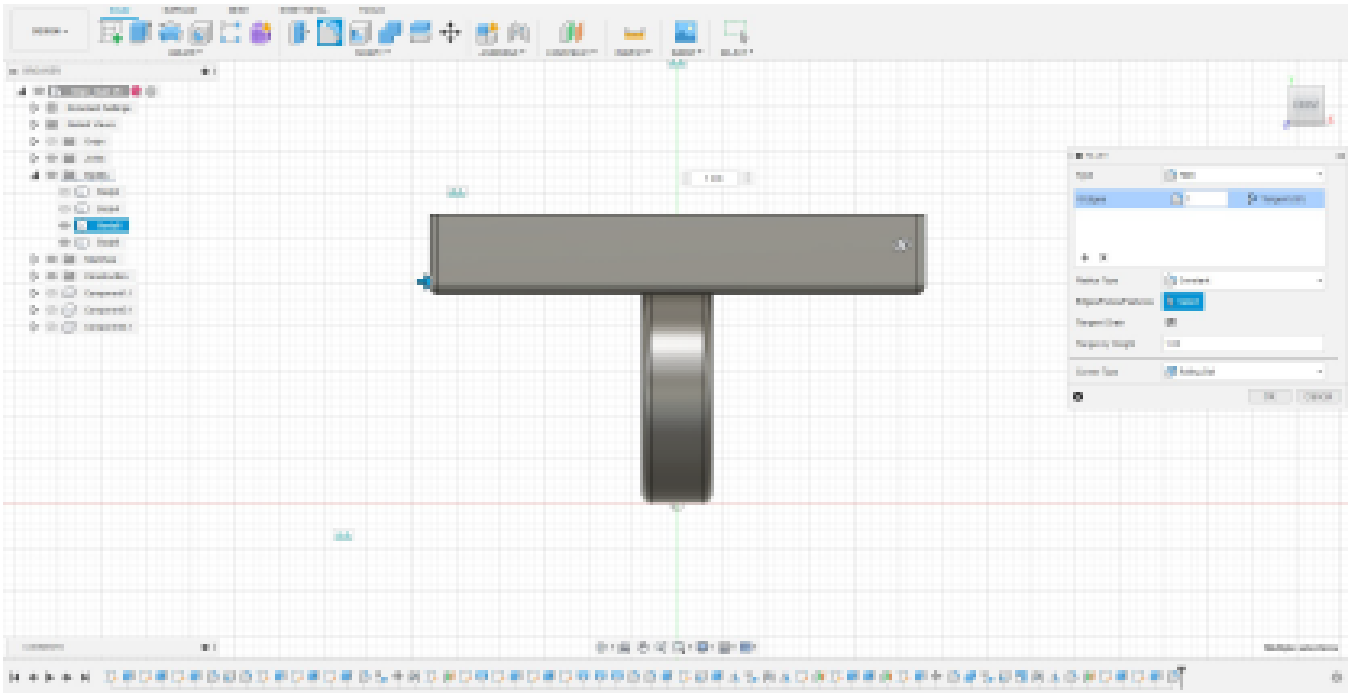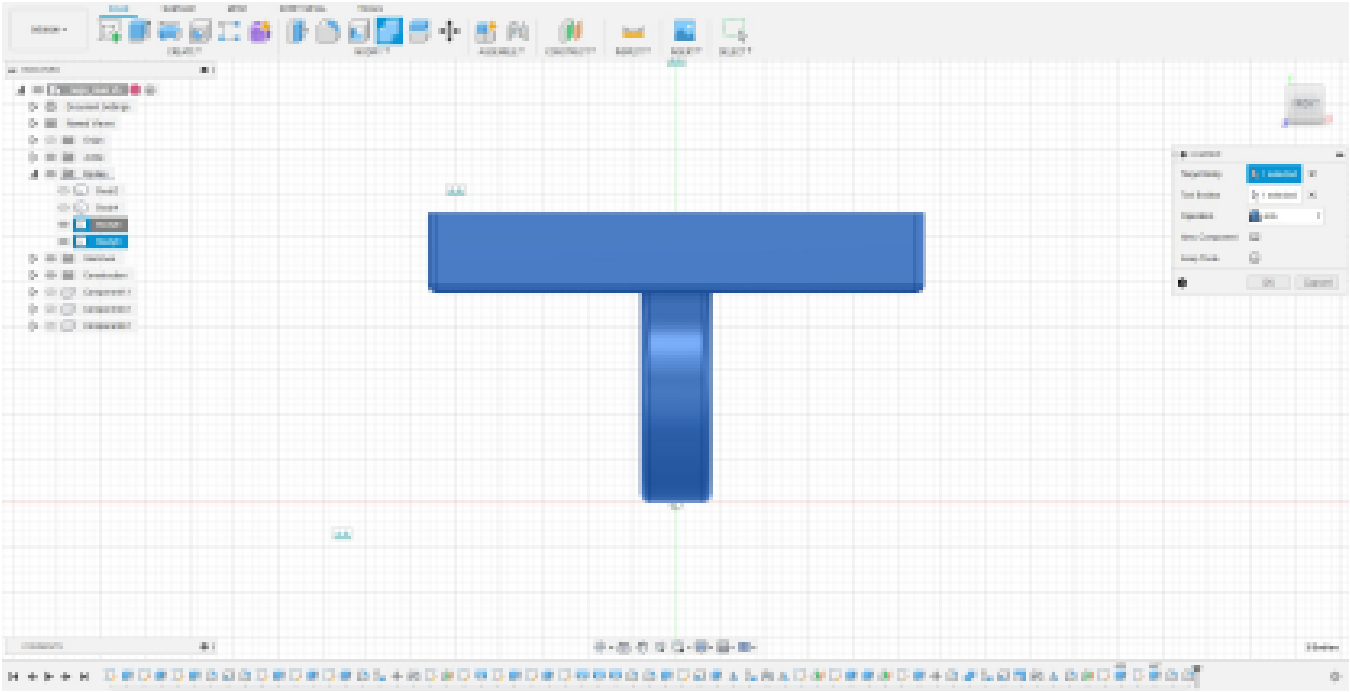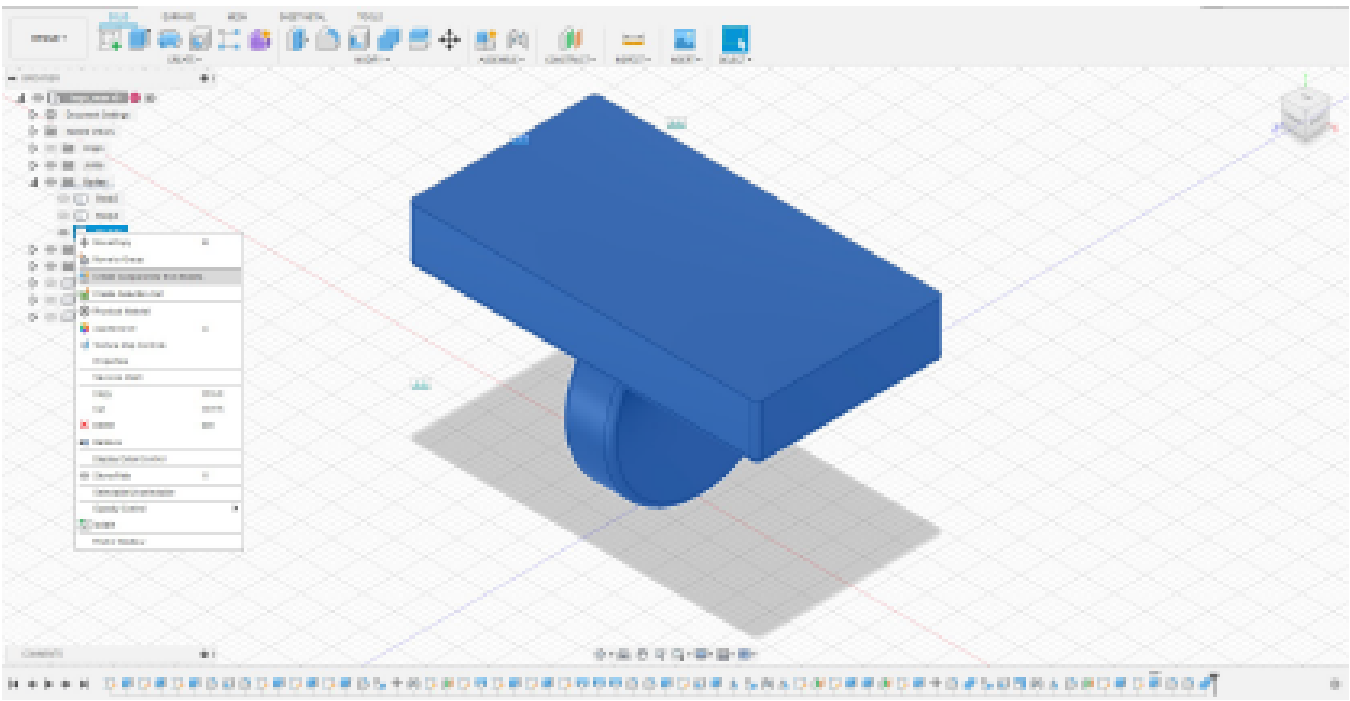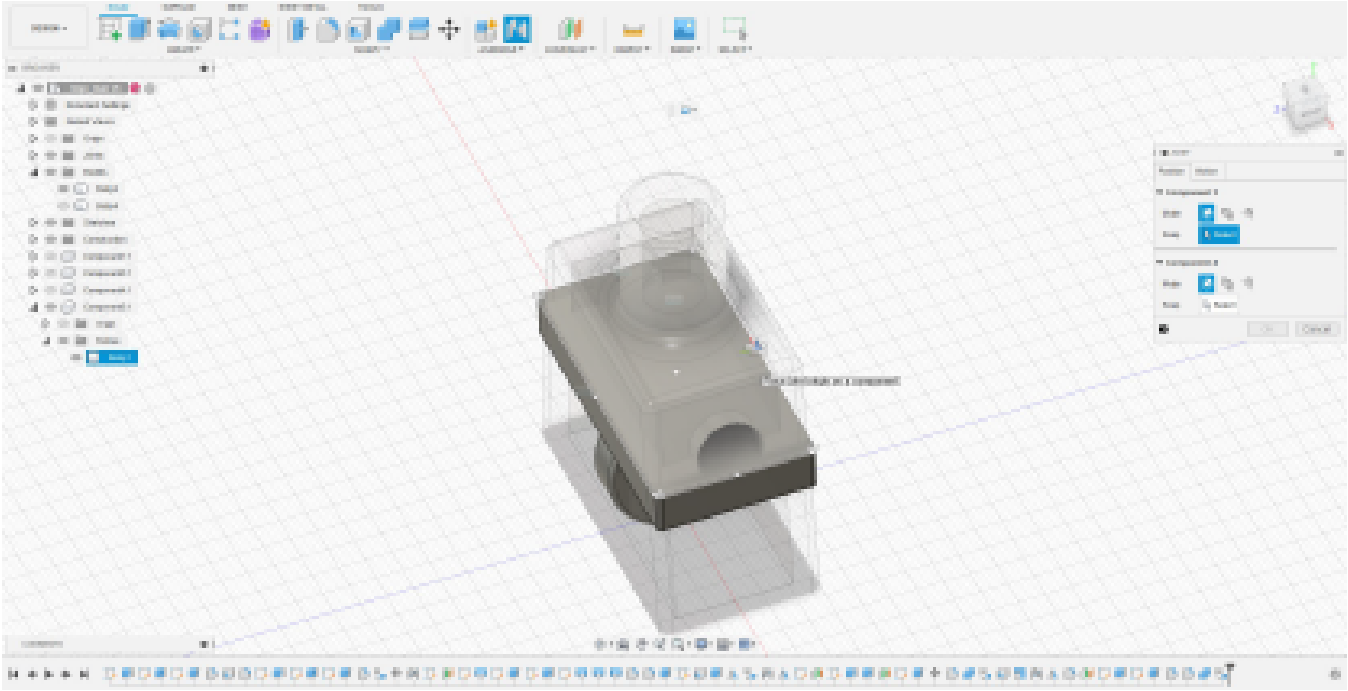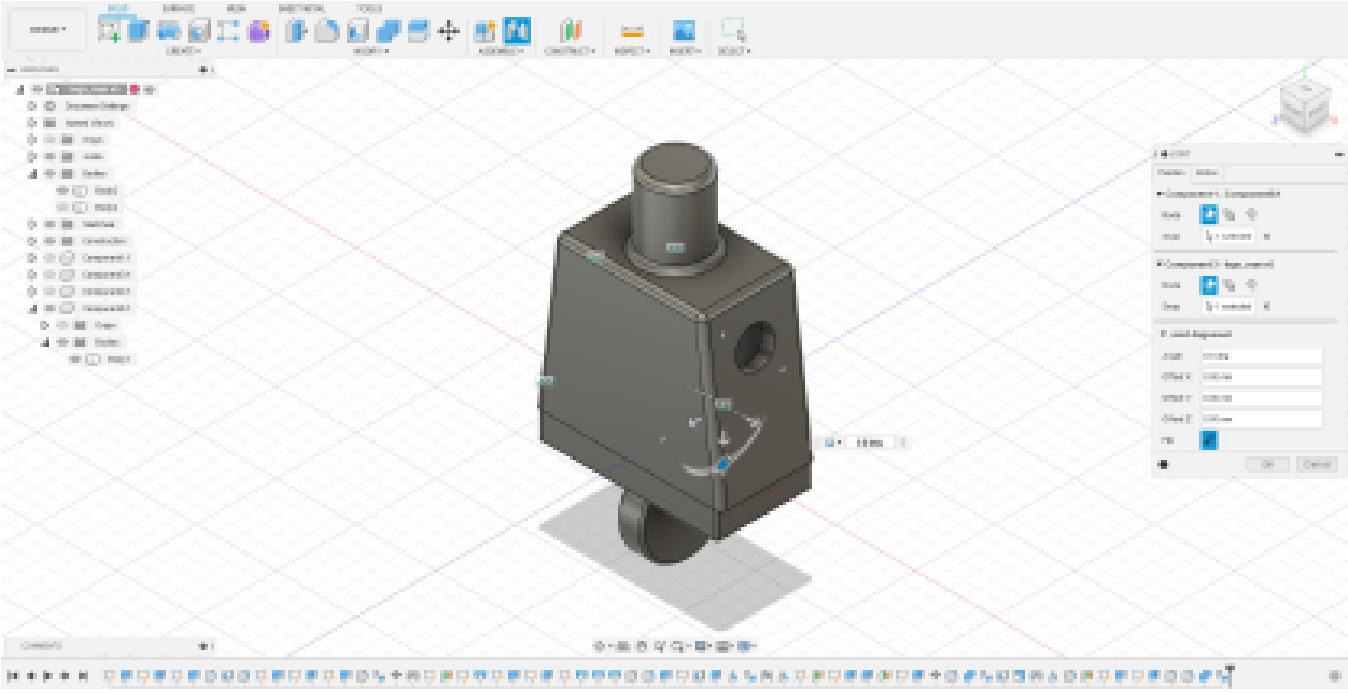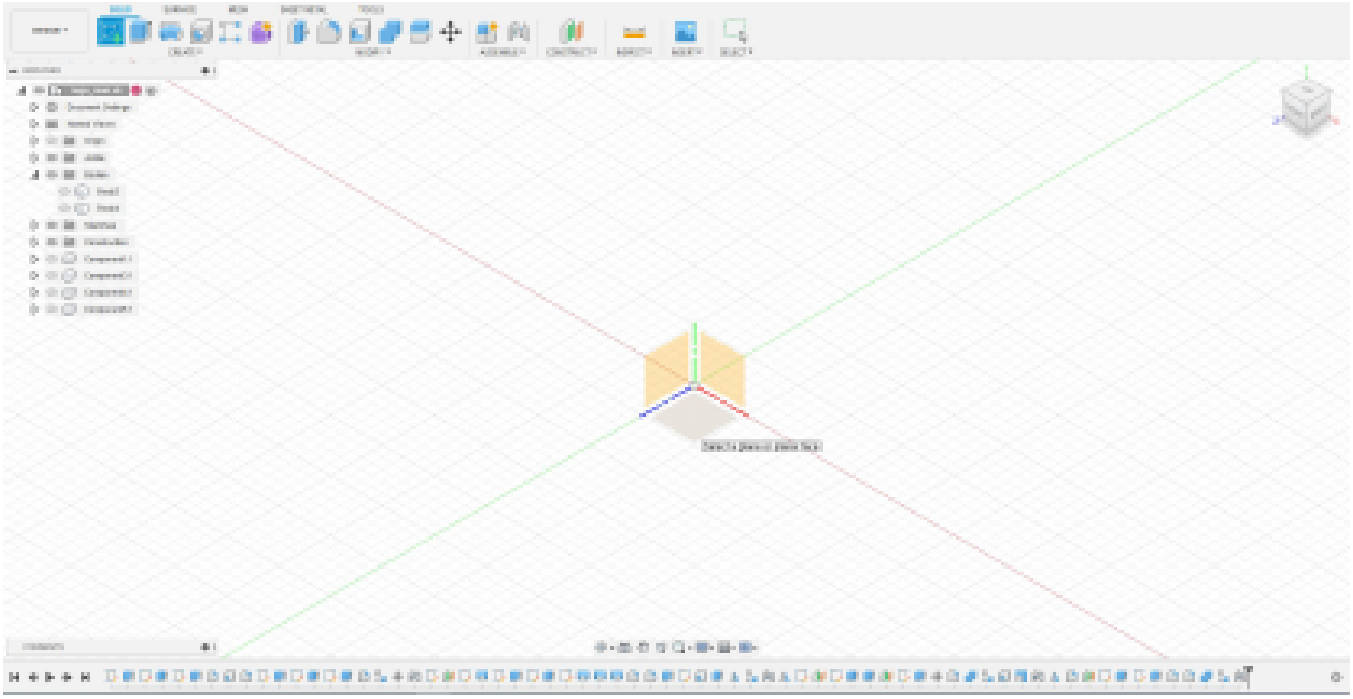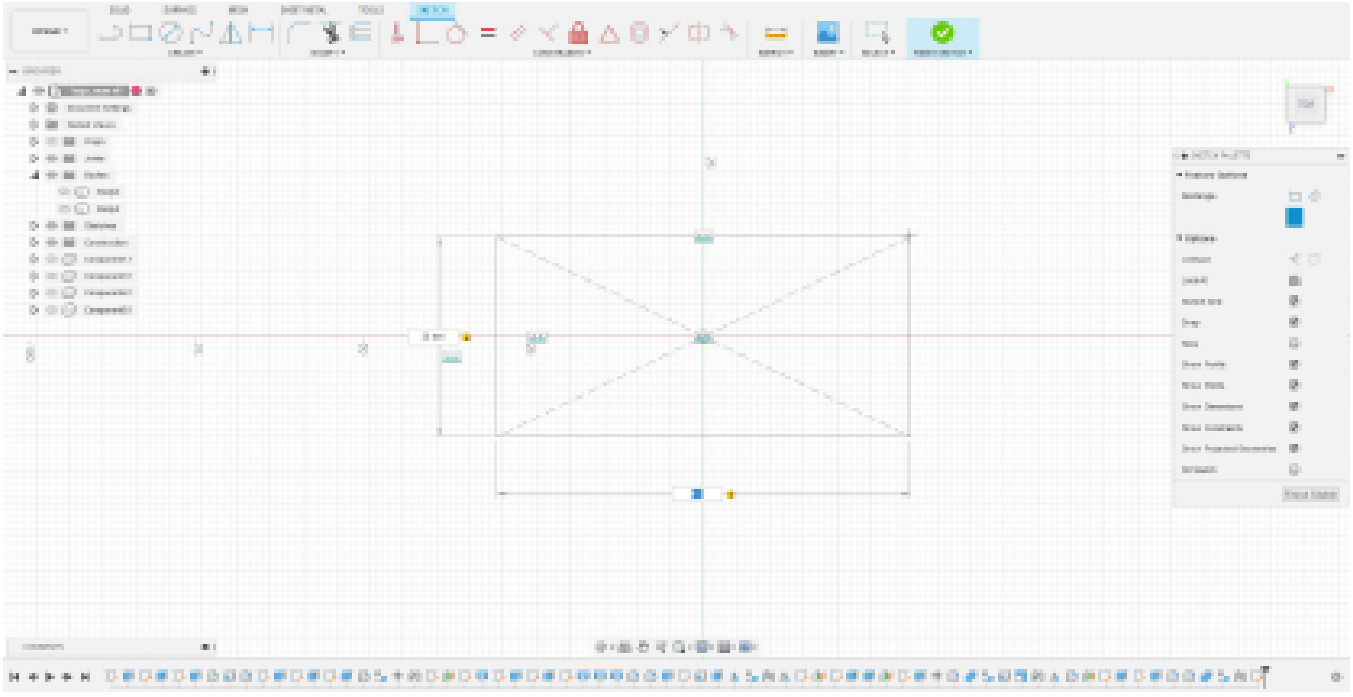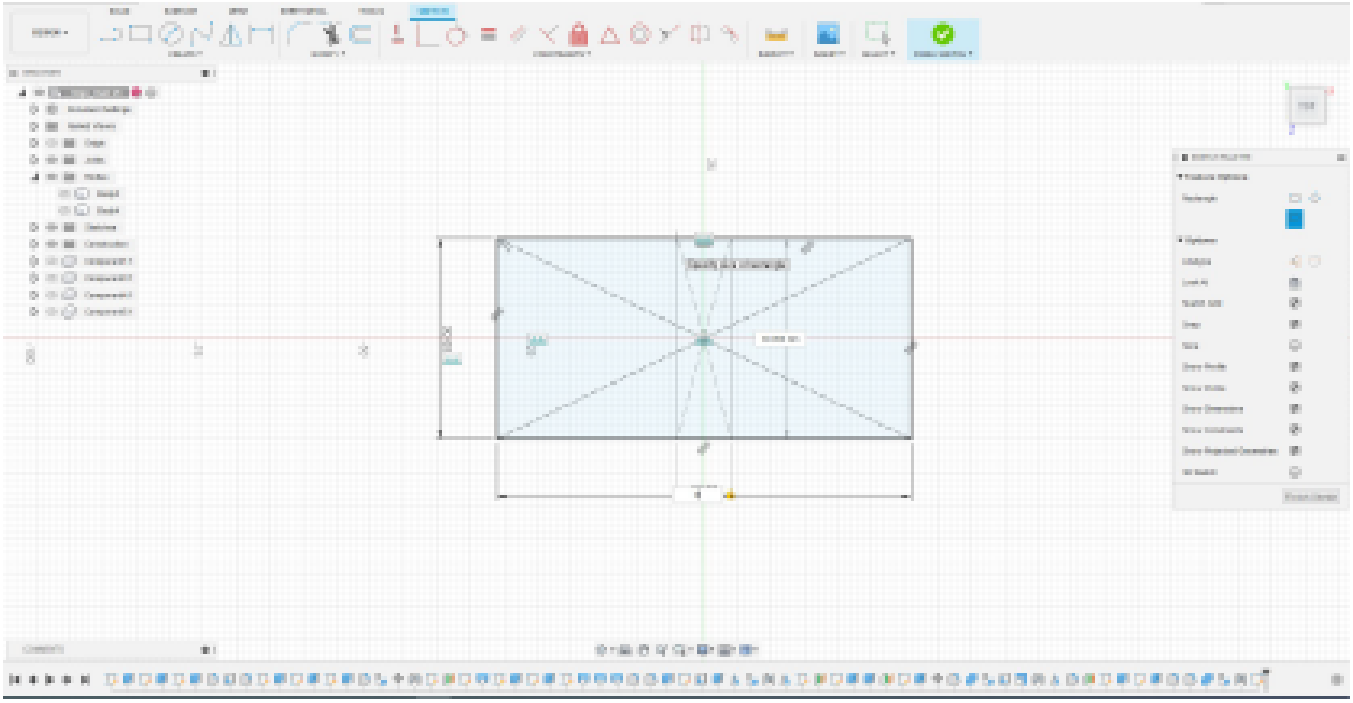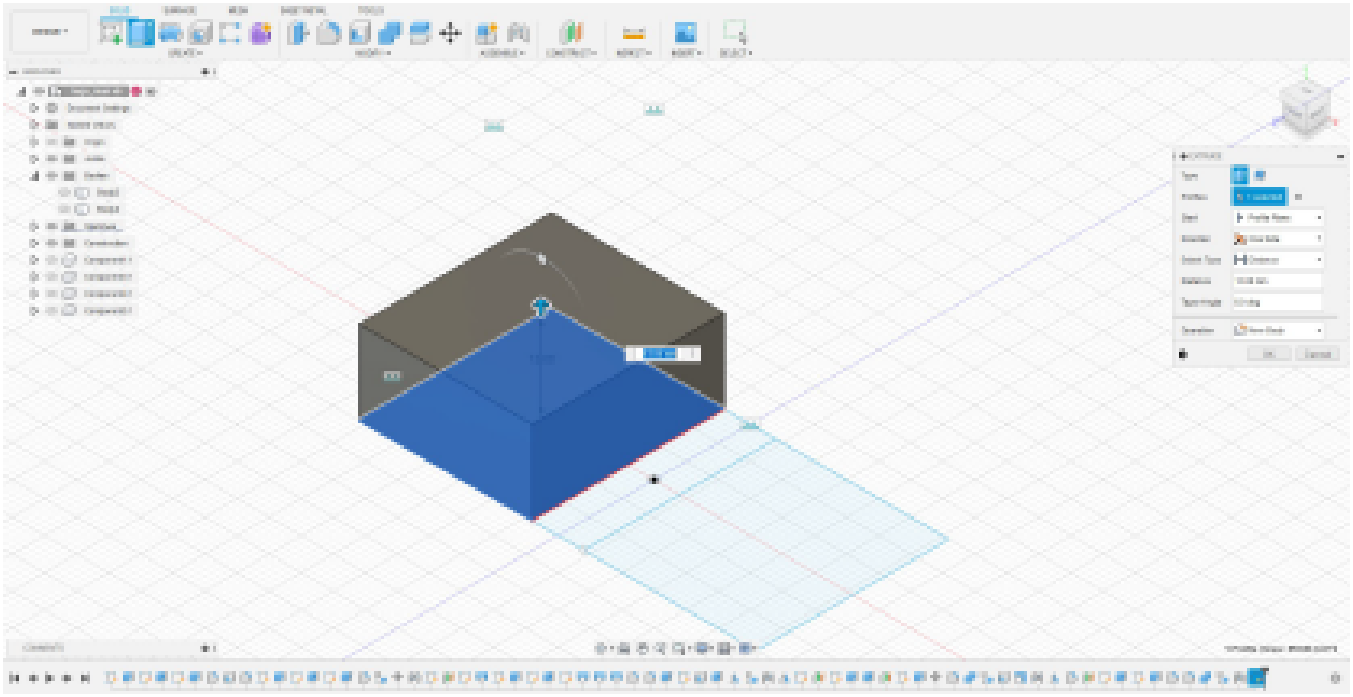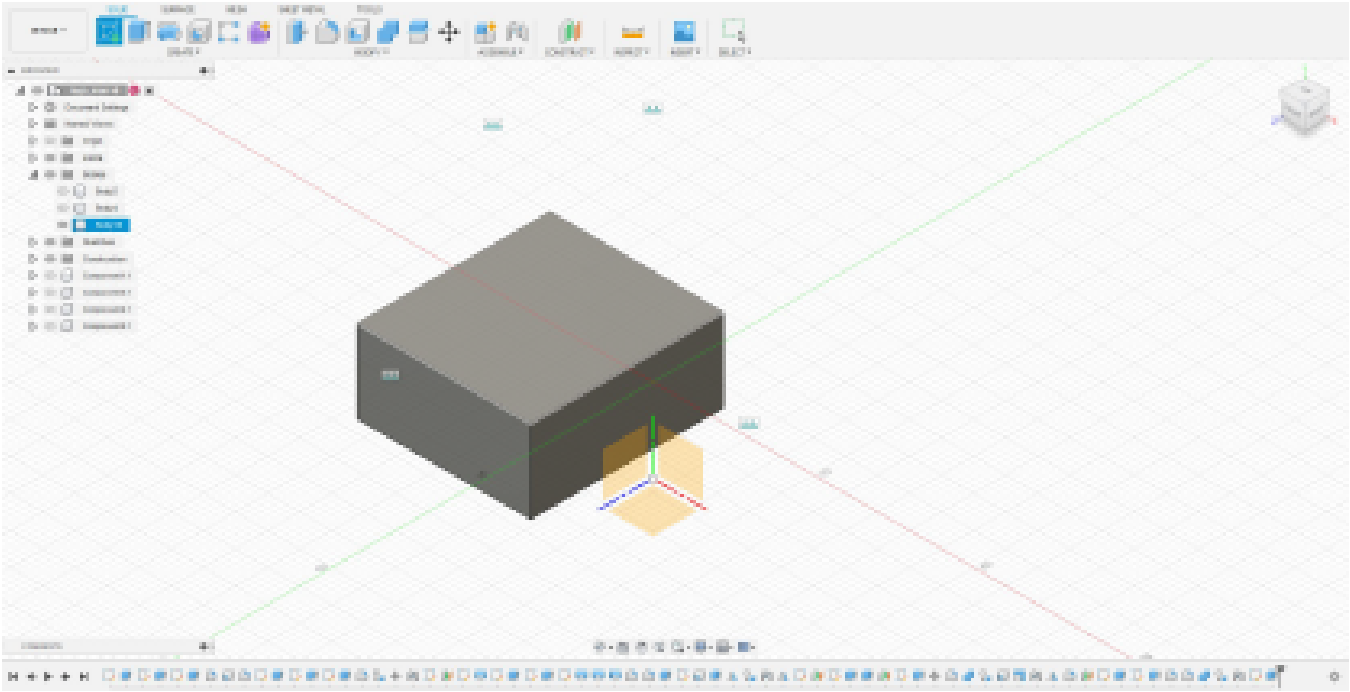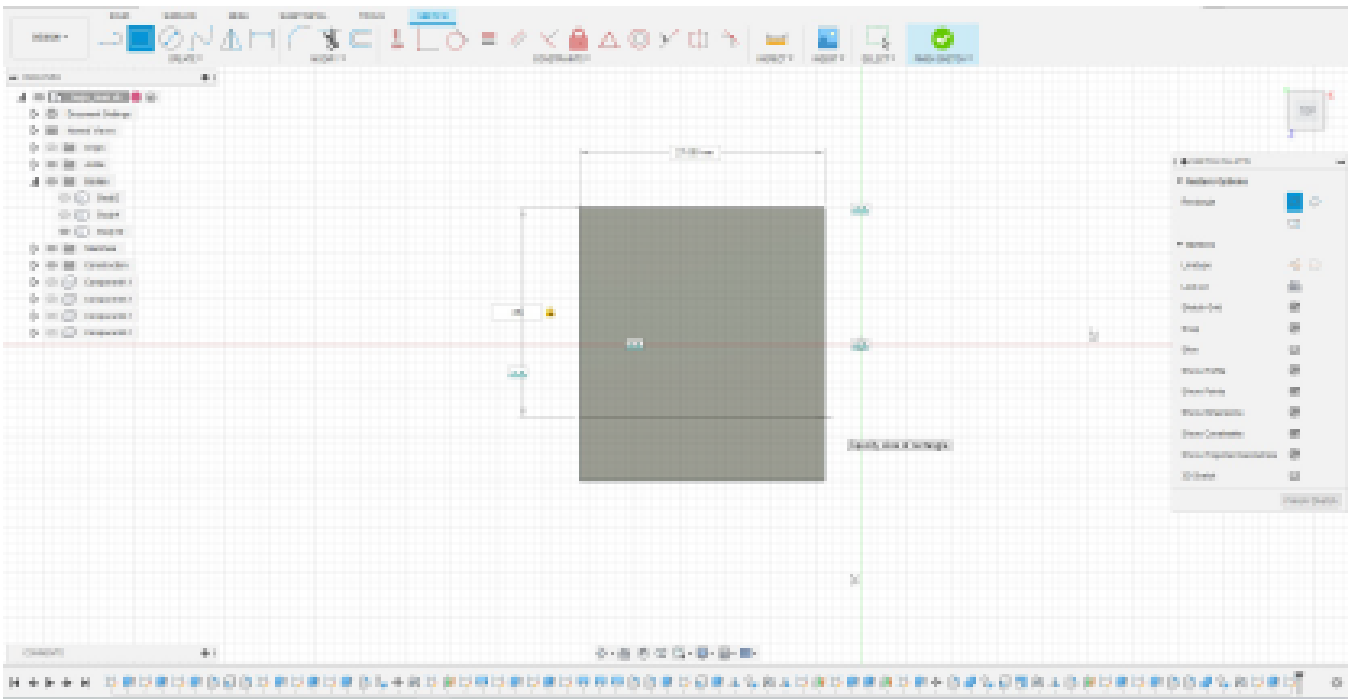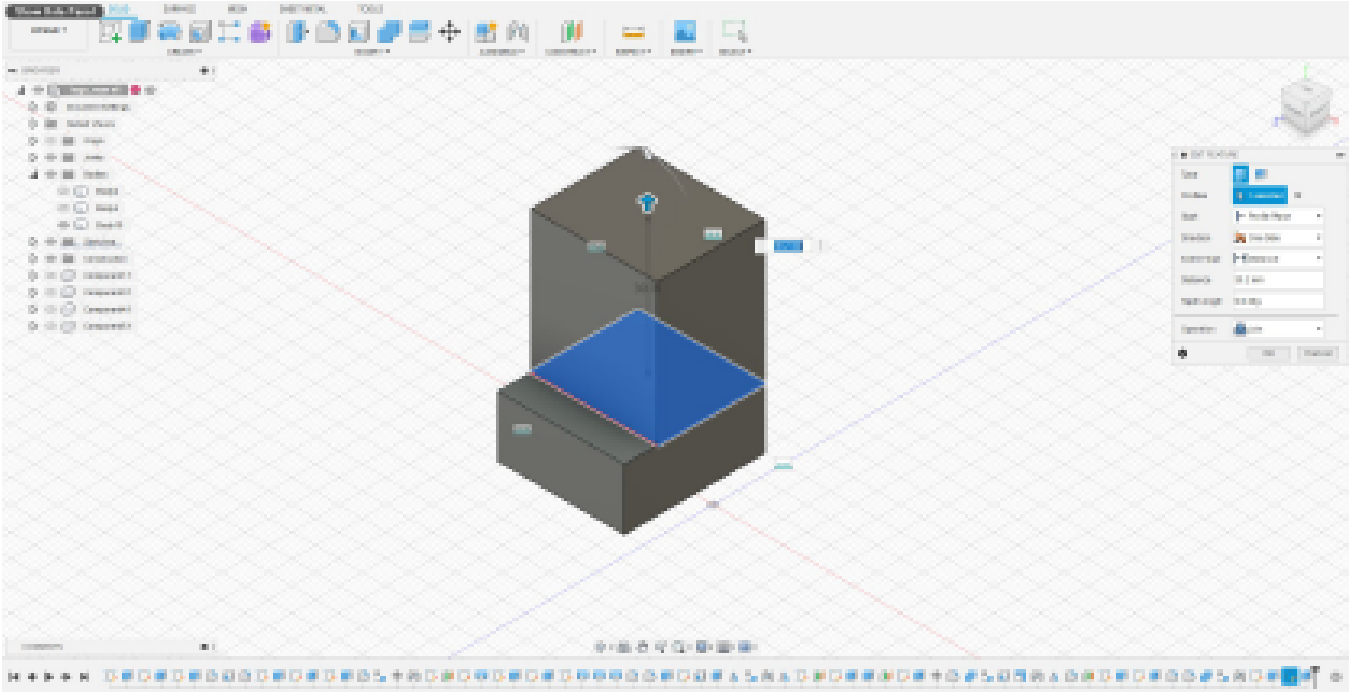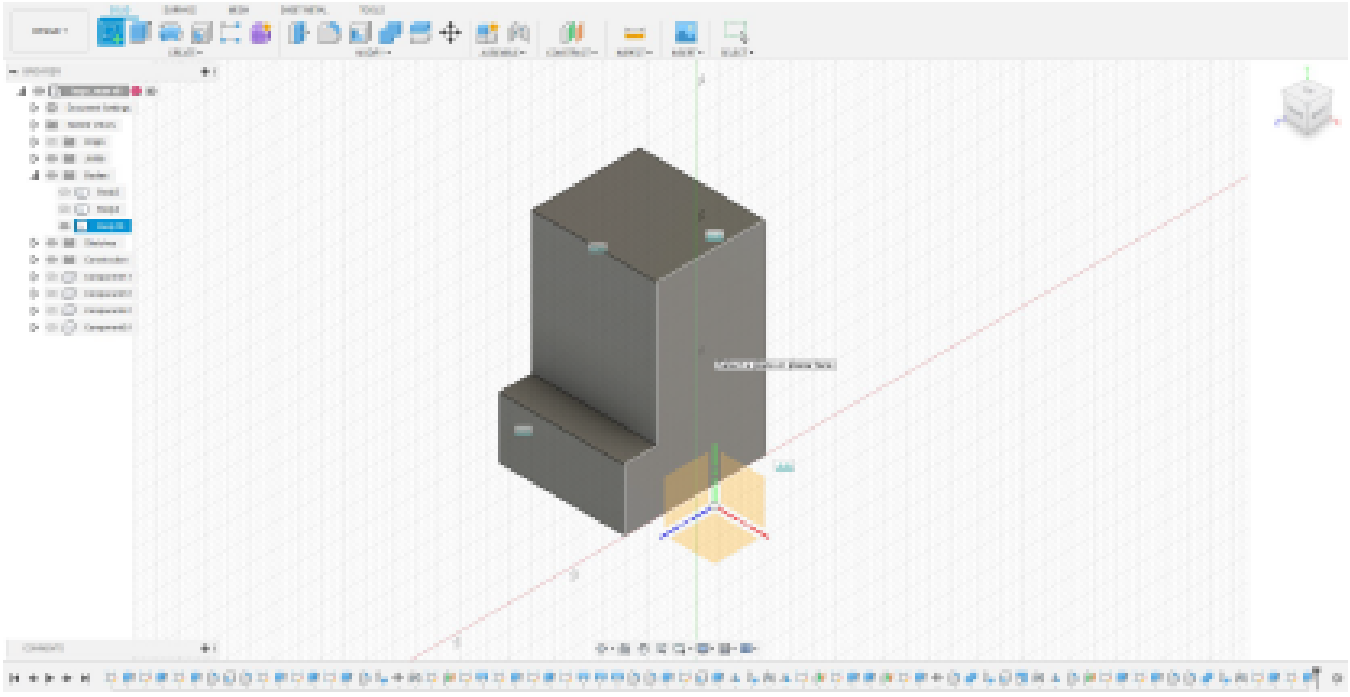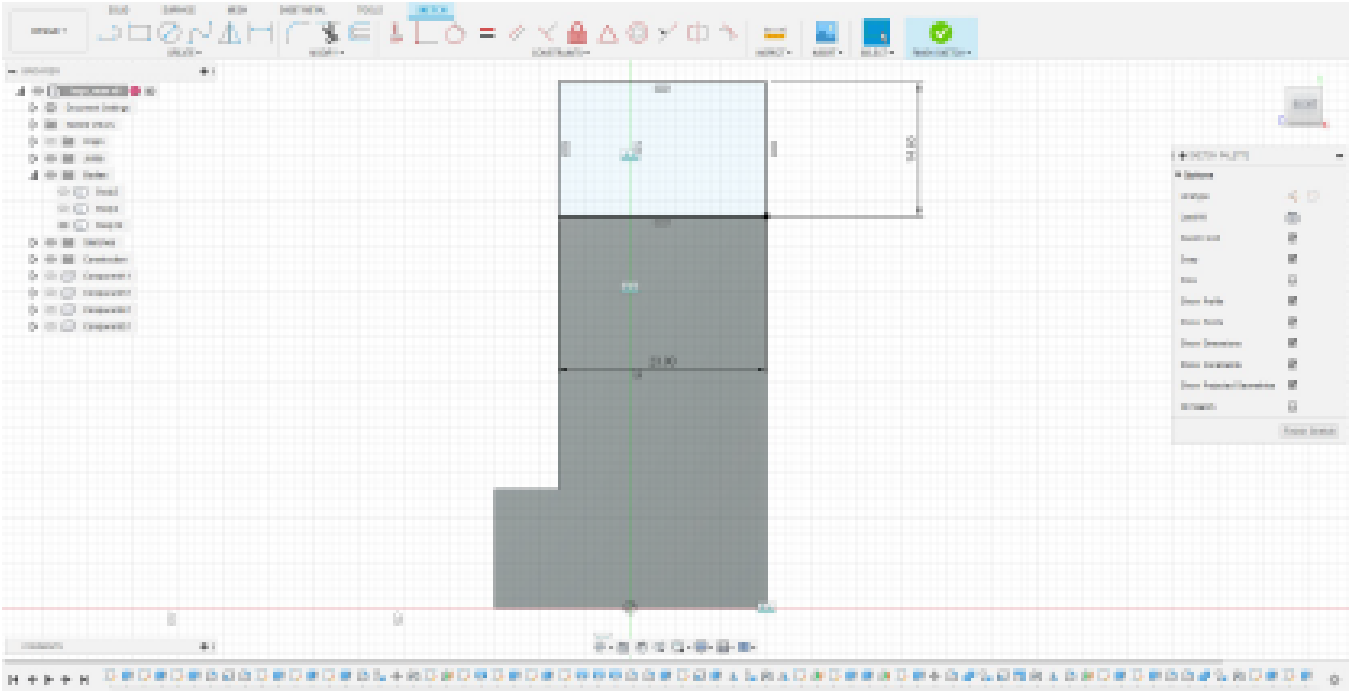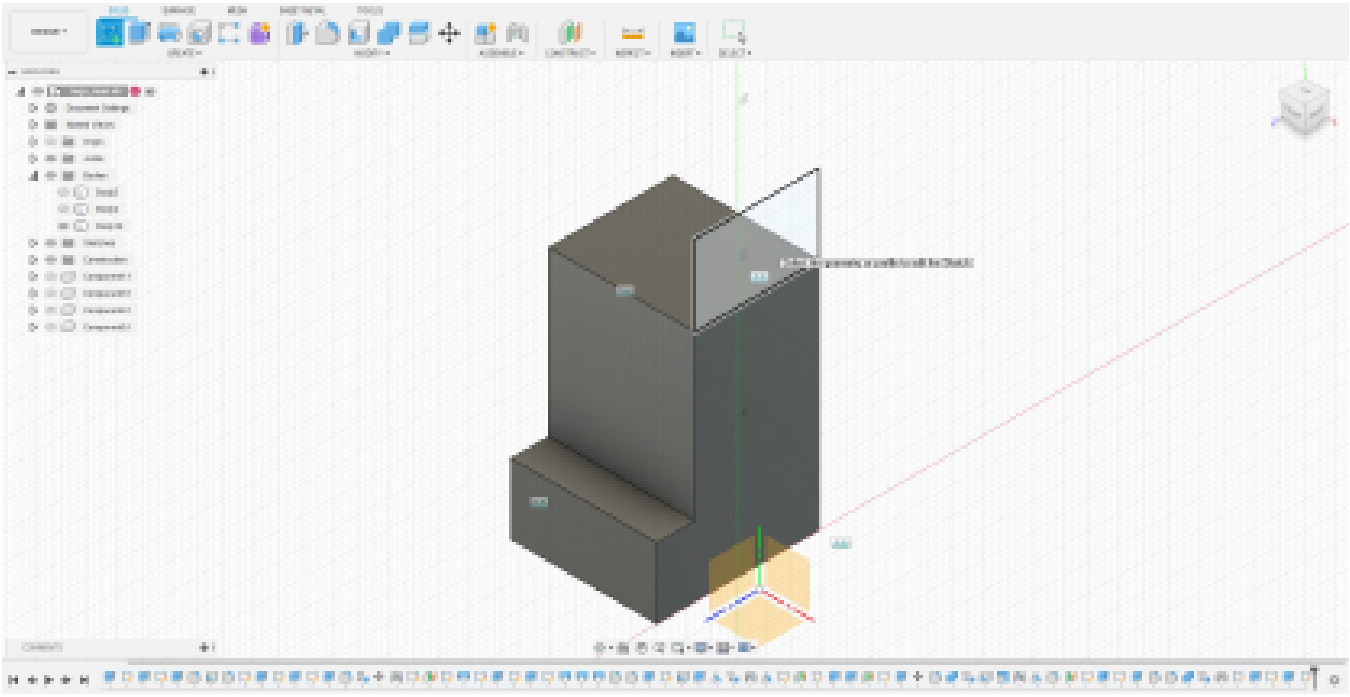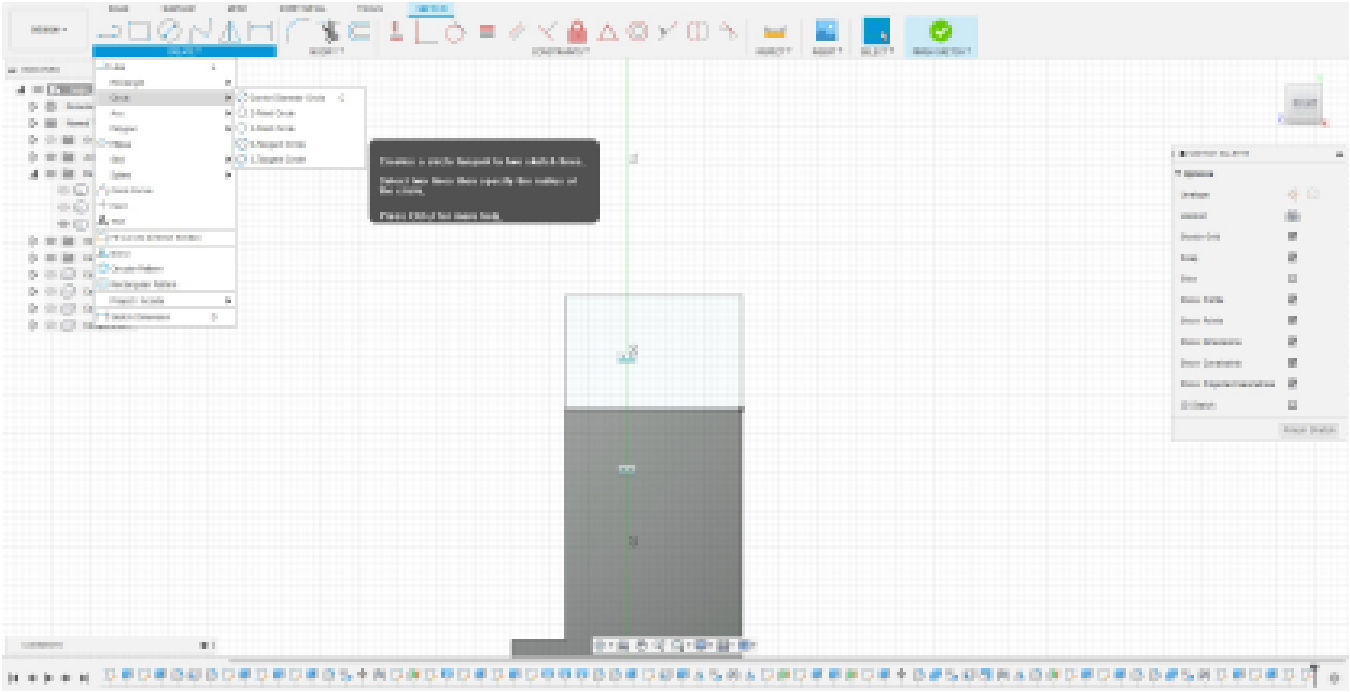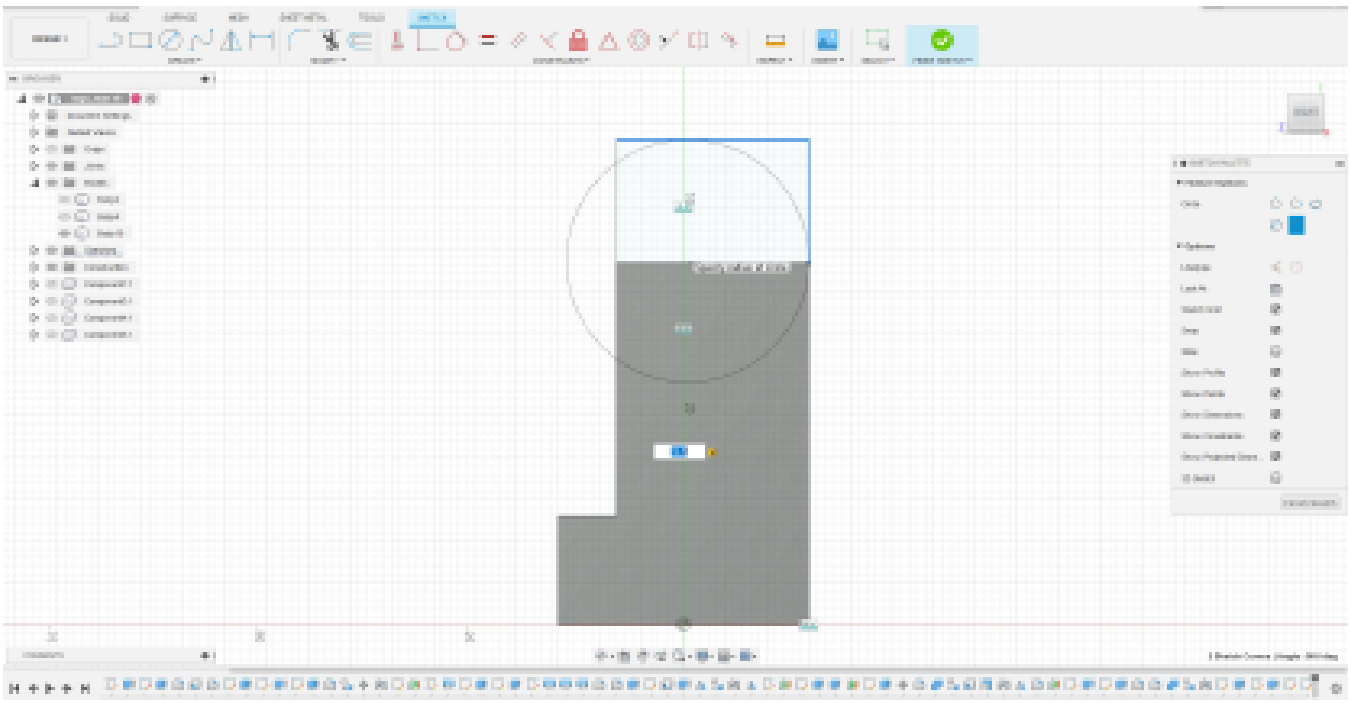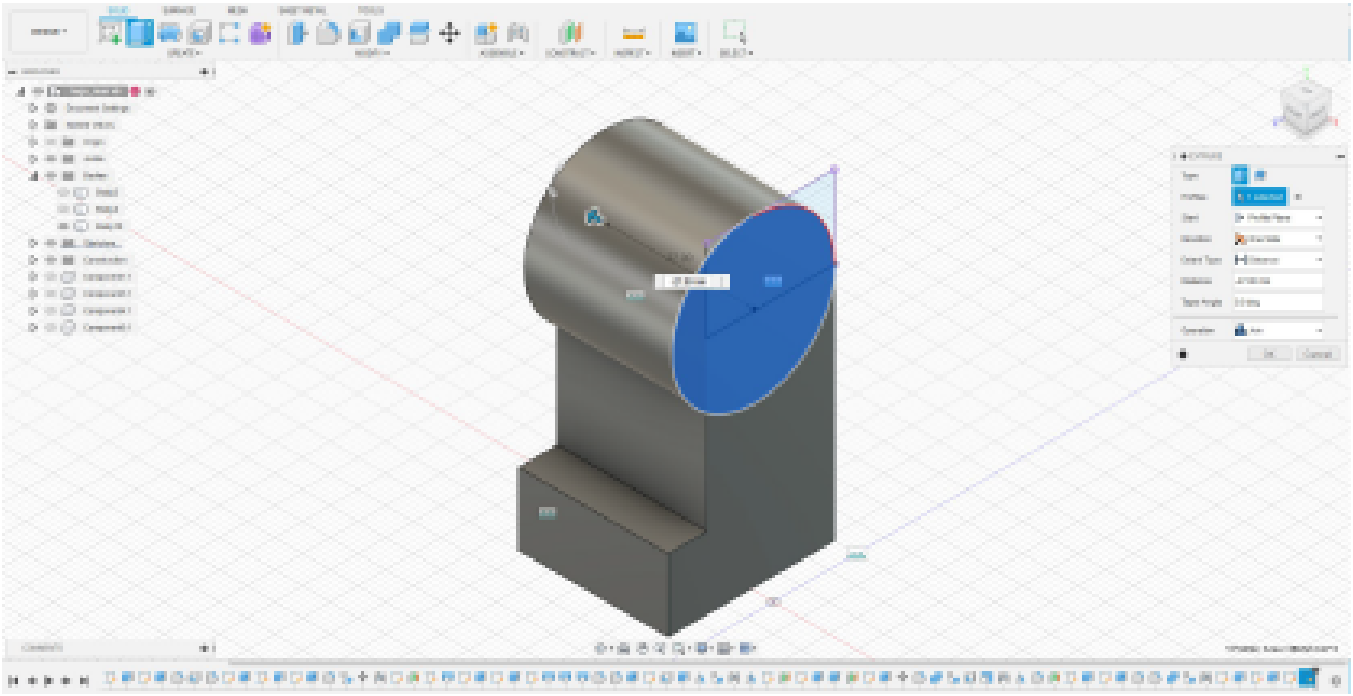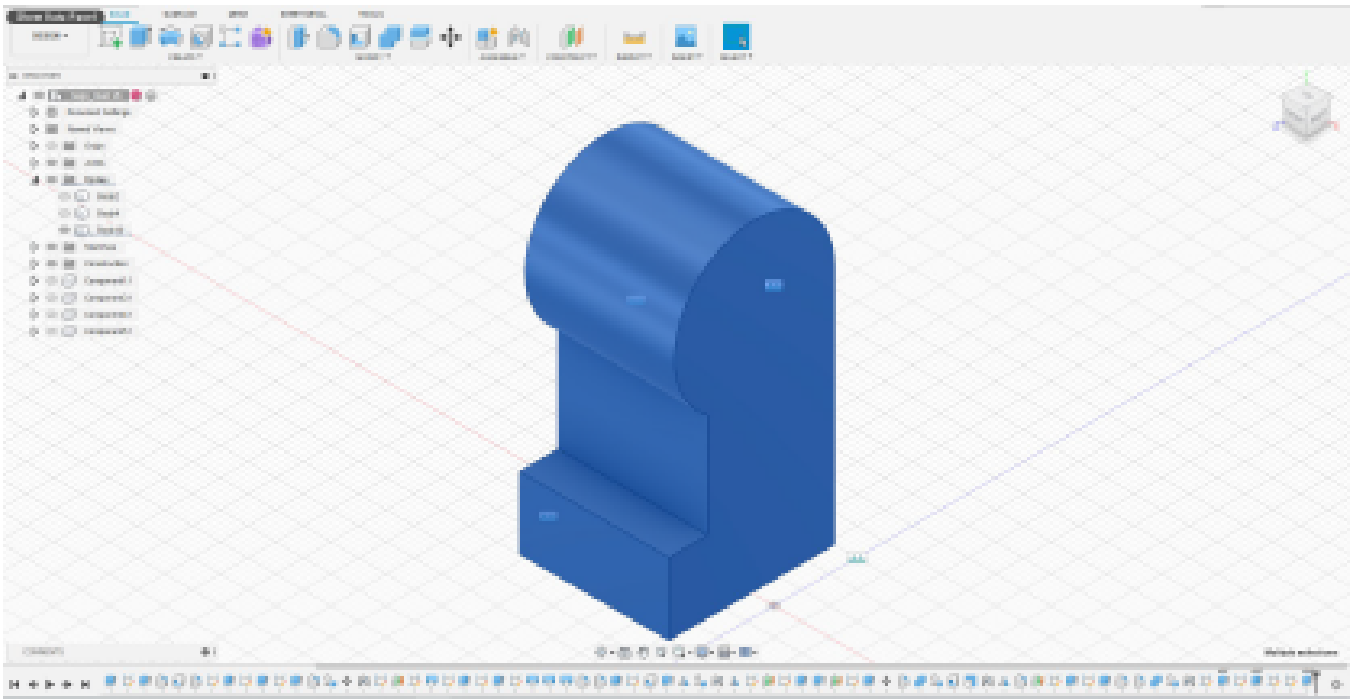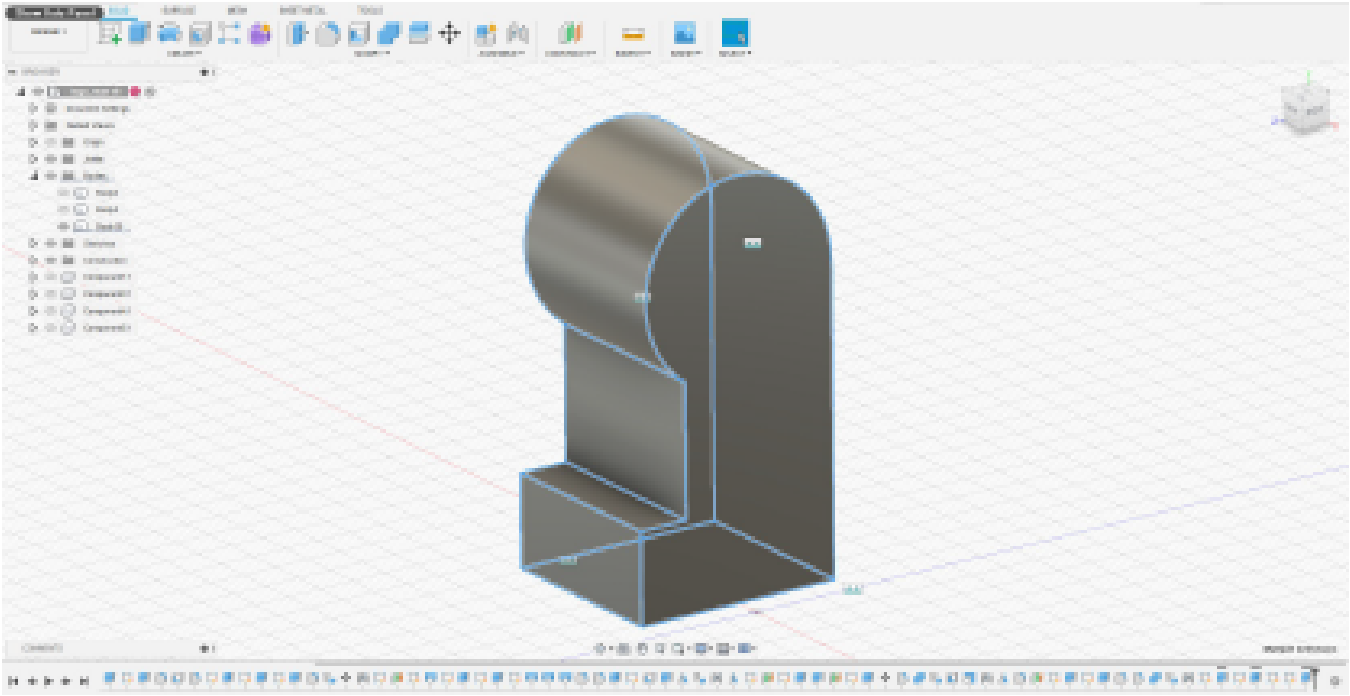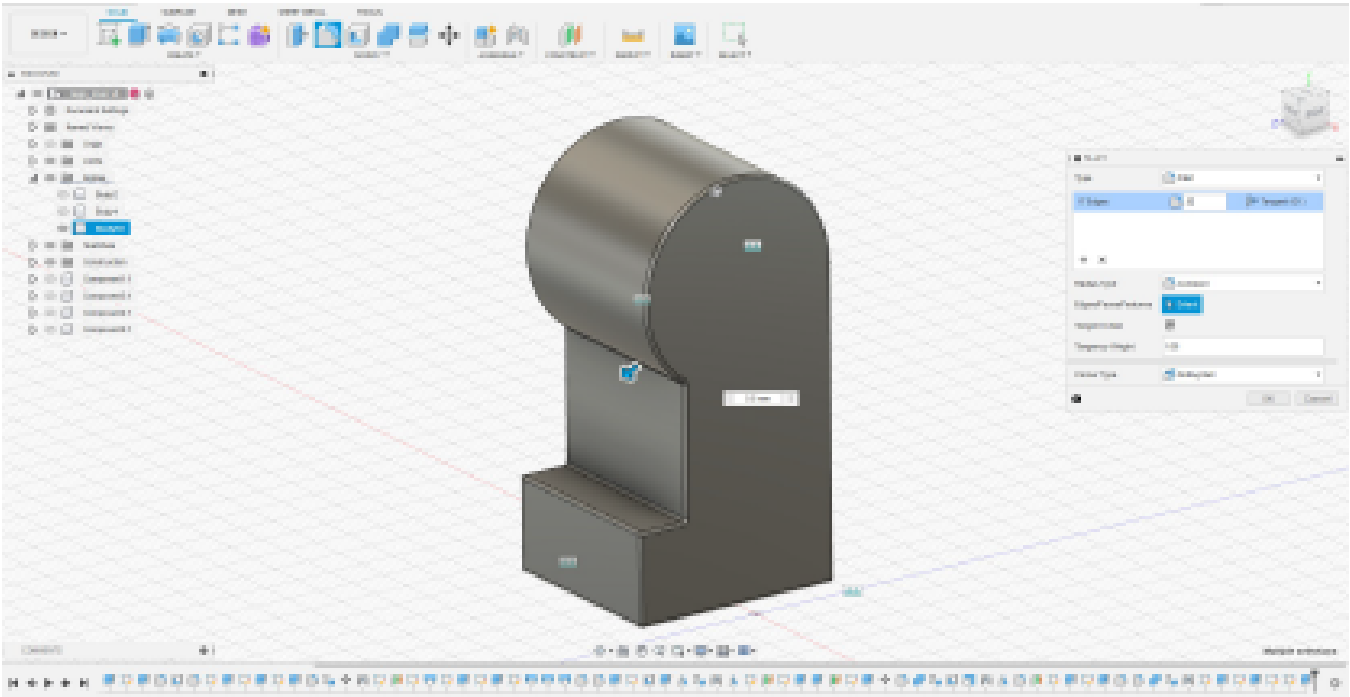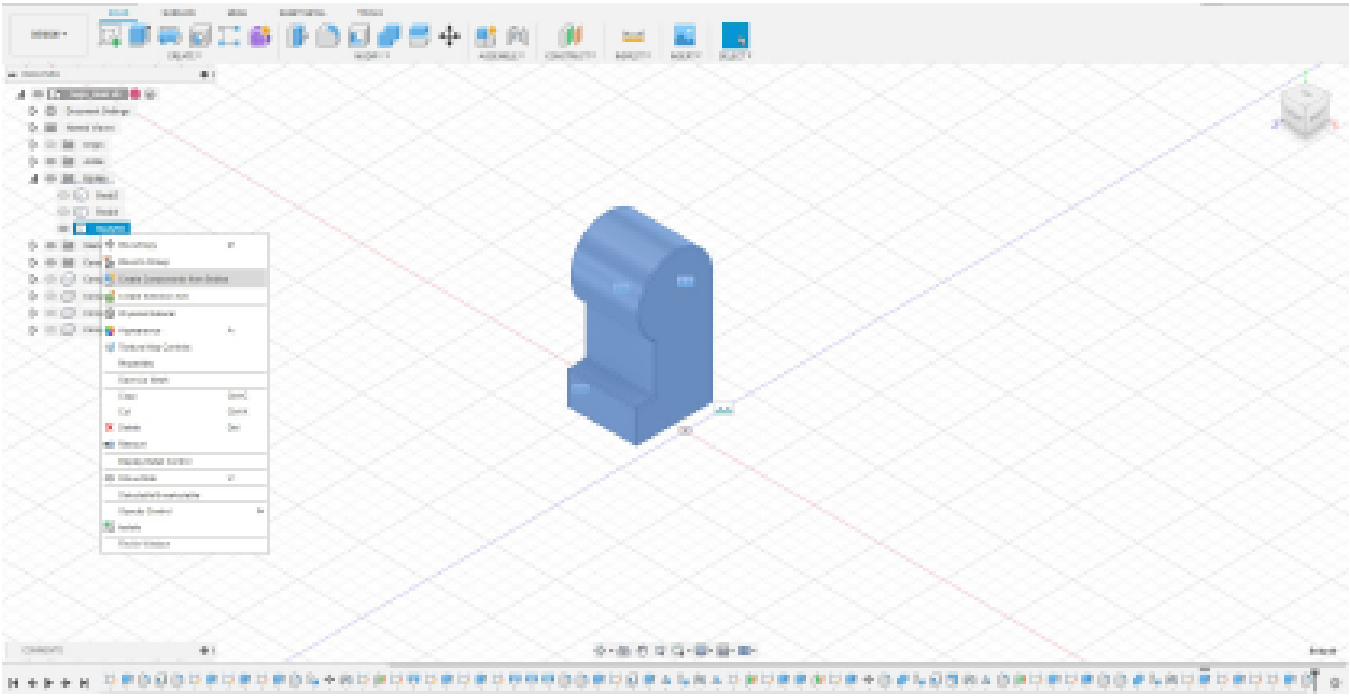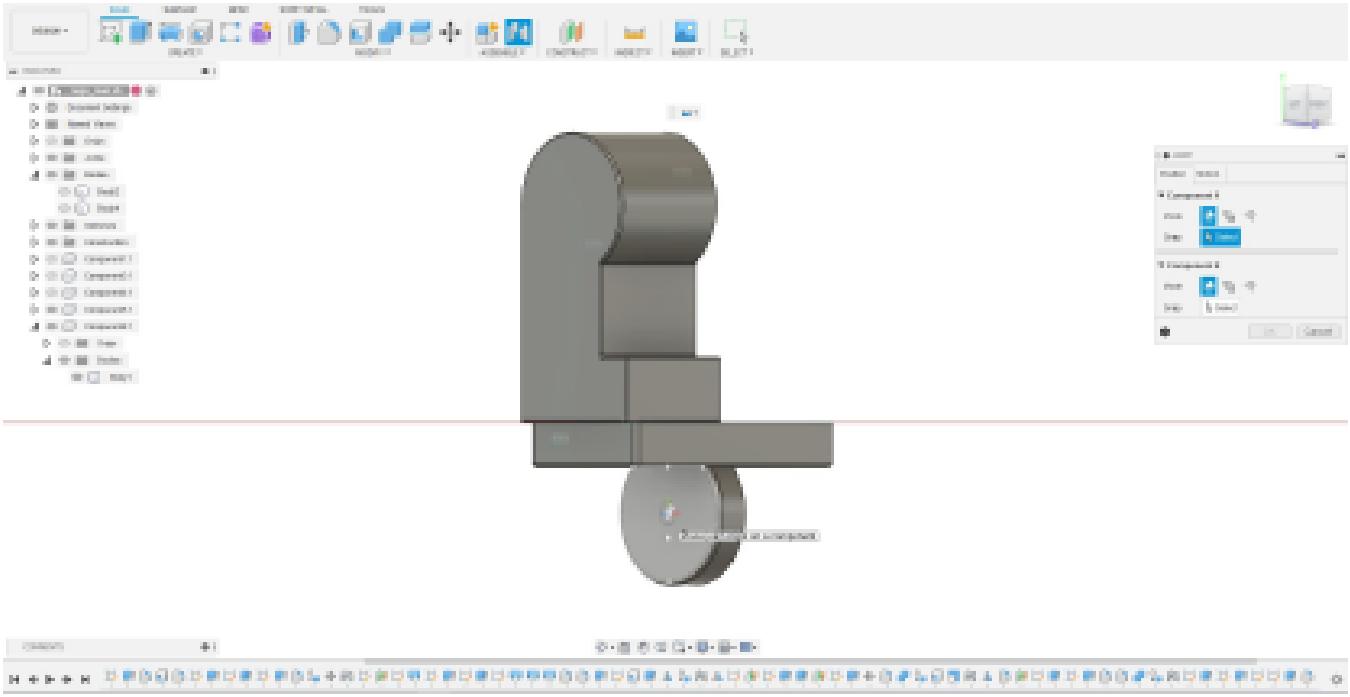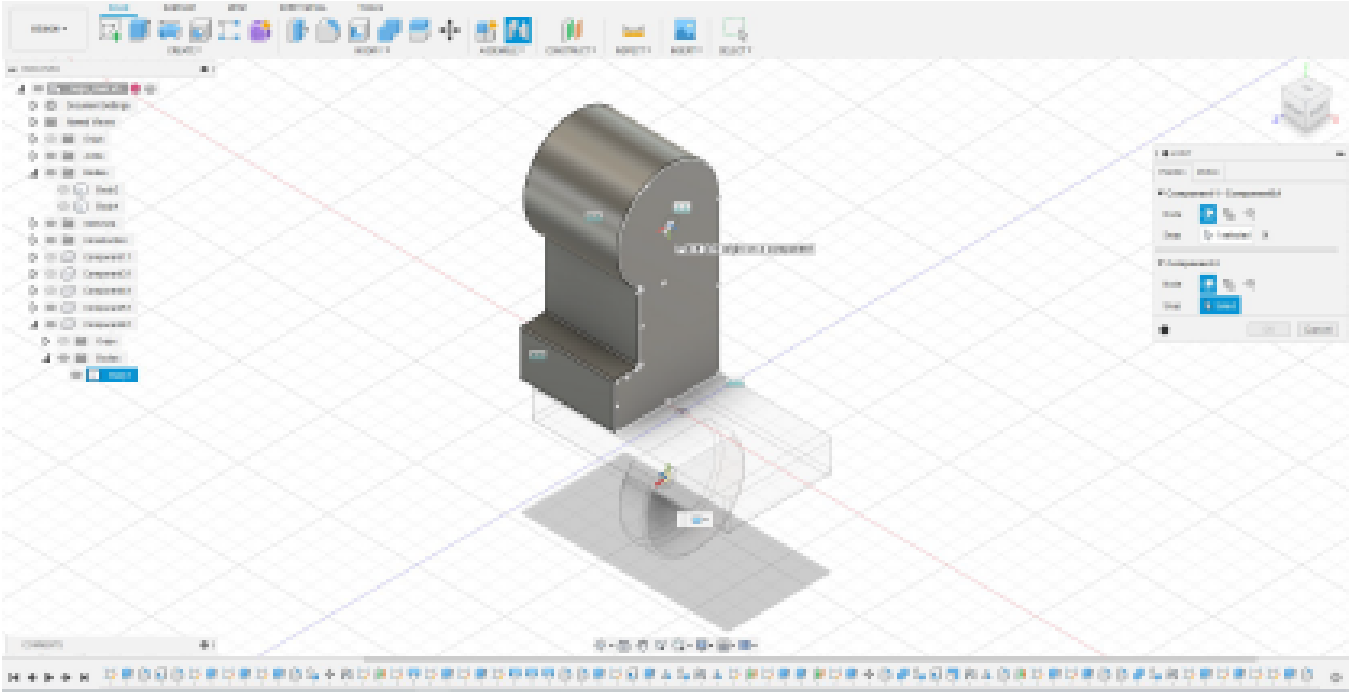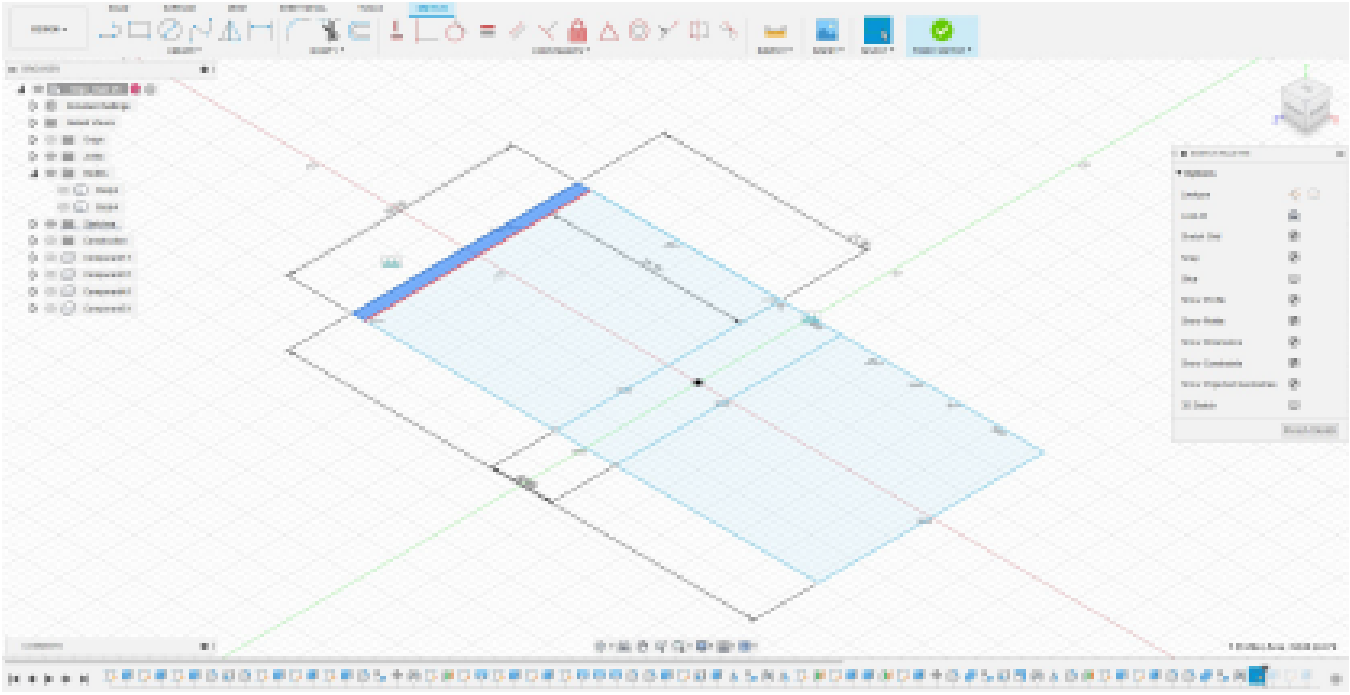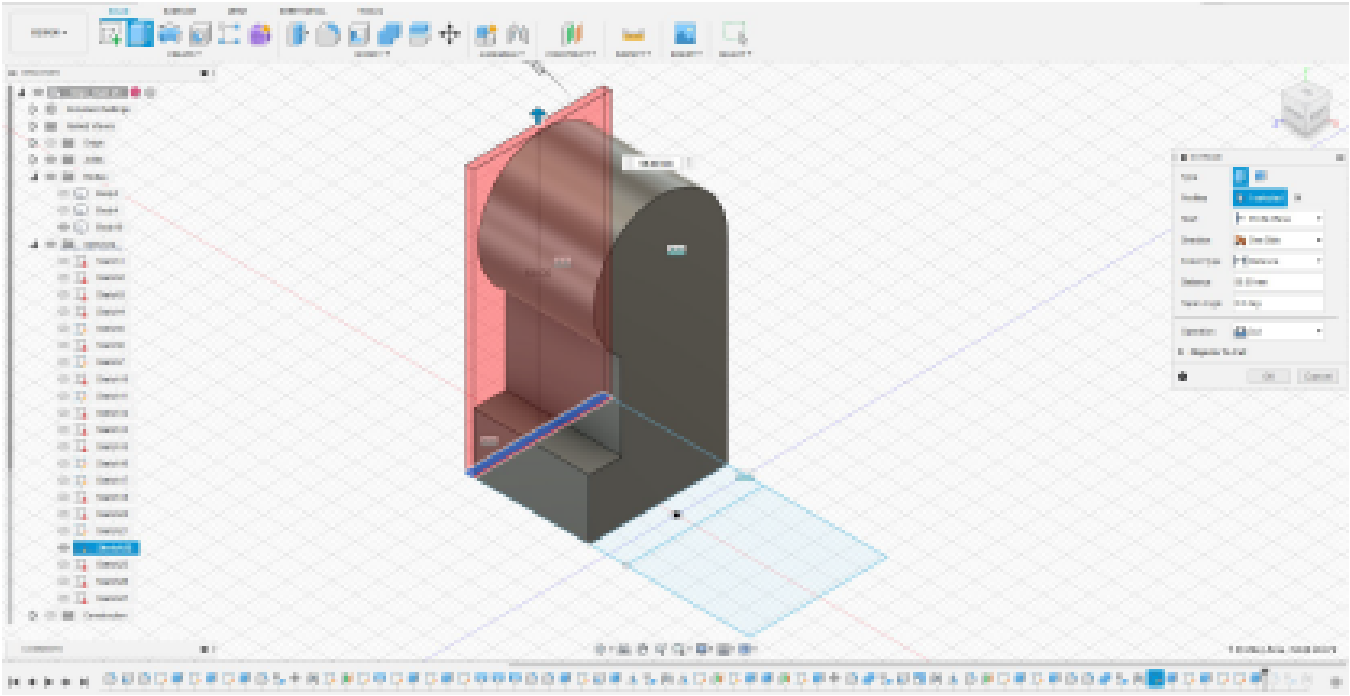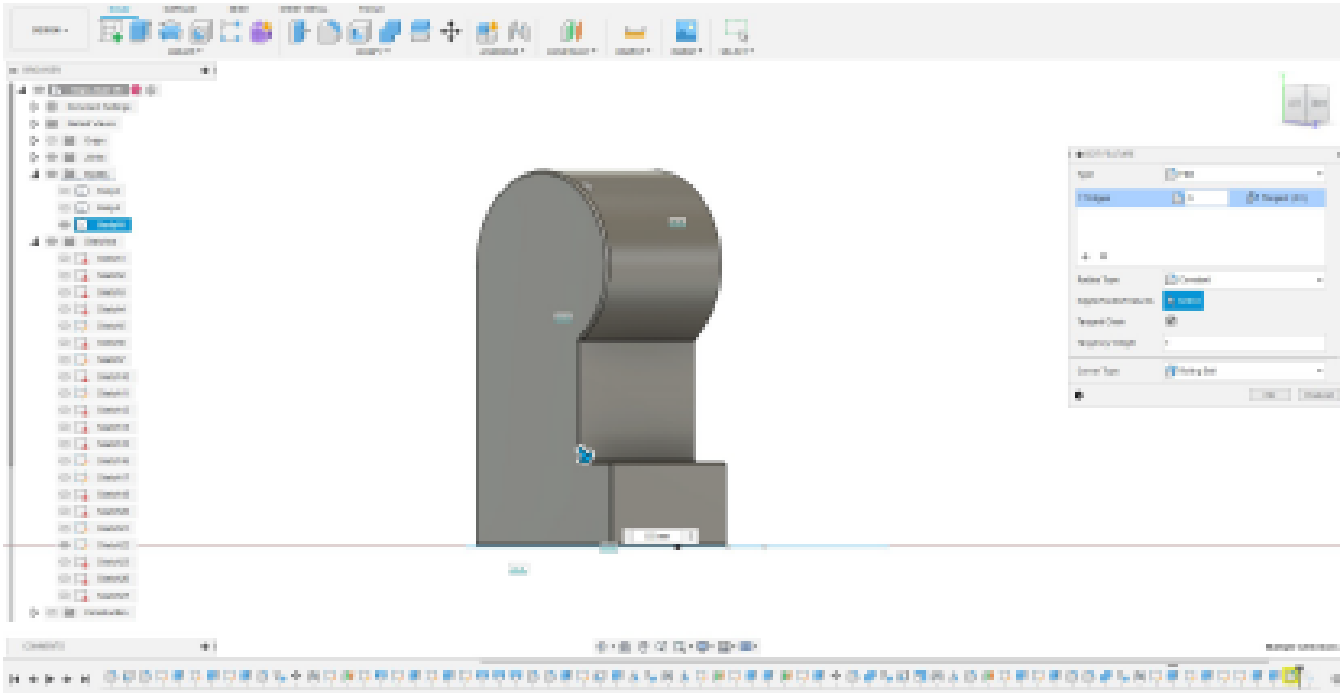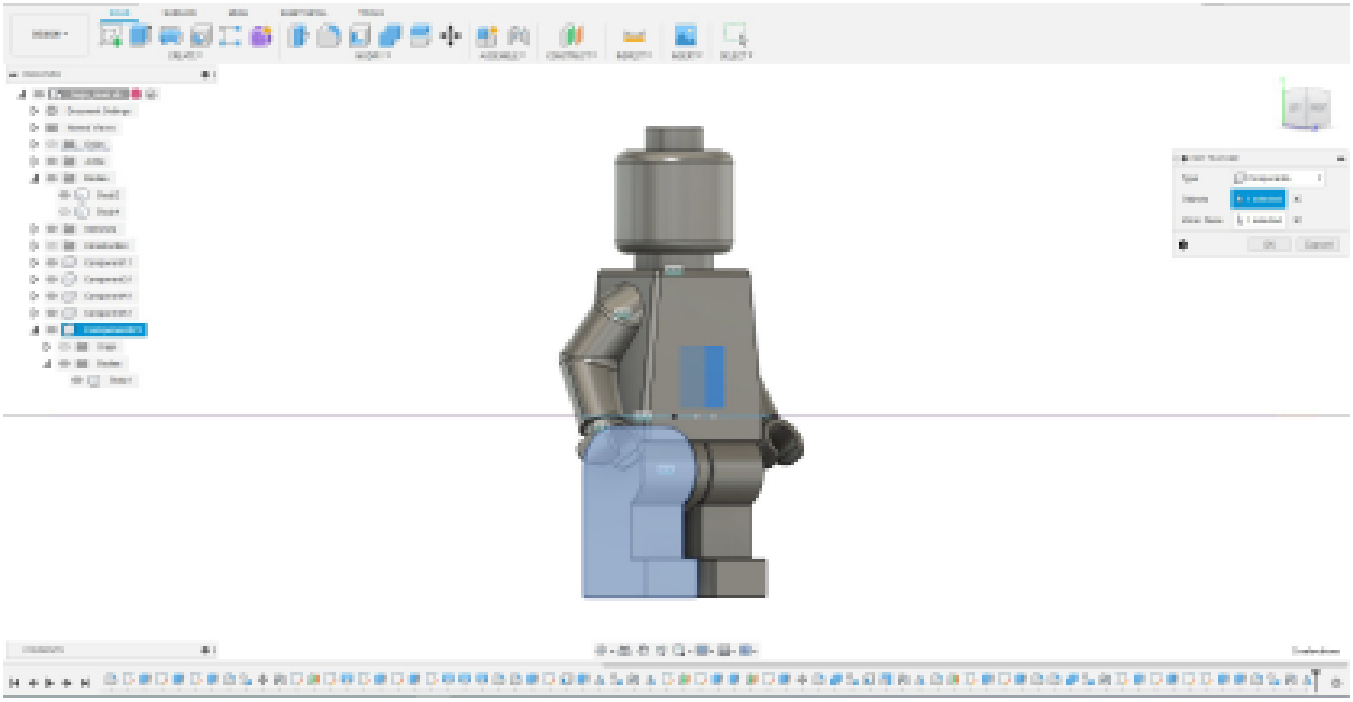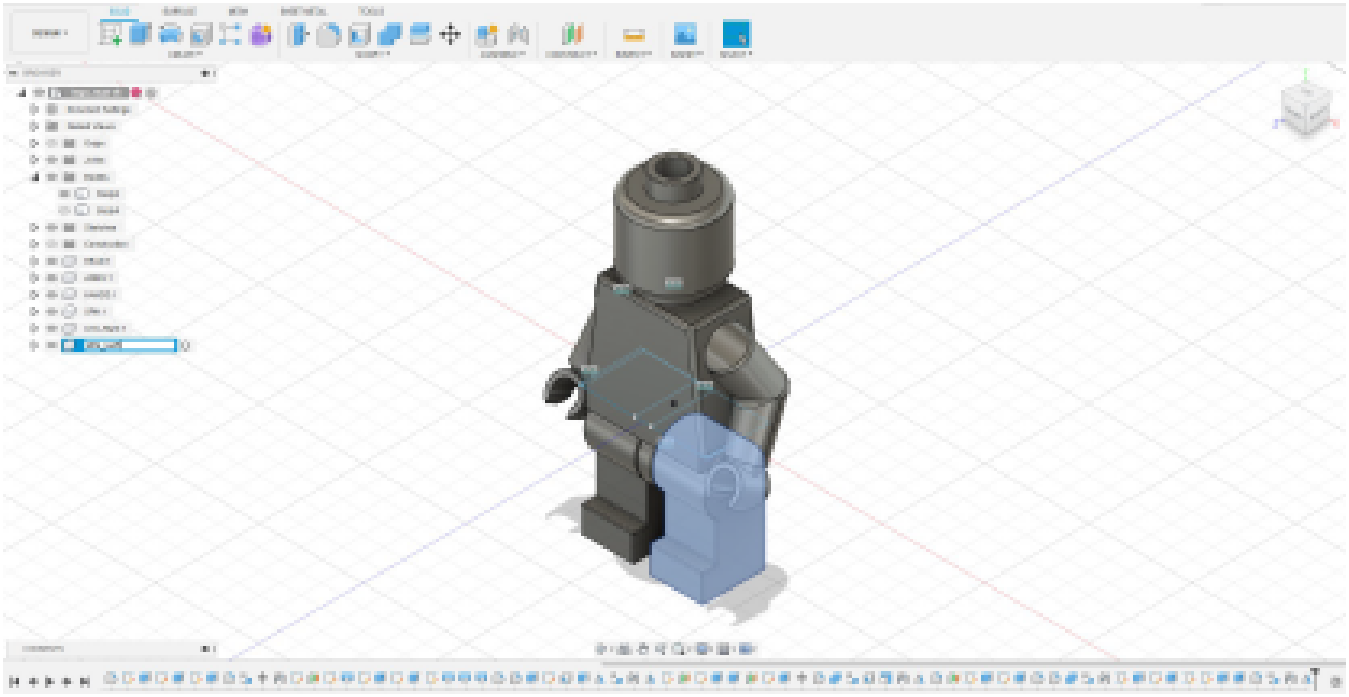
Toyncine